One Direct Source for all your Water Blasting Parts and Accessories!

TUBE NOZZLES	PAGE
Male Machine Screw	1
AP Standard	1
Monroe-Jet Orbital Nozzles	1
Pineapple Line Moles	1
Line Mole Inserts	1
Thruster Nozzle	1
Button Tip	1
Standard with Carbide Blade	1
Penetrator	1
TLX	1
Evaporator	1
Multi-Groove	1
Nozzle Drill Patterns	2
Spinner Nozzles	3
SURFACE NOZZLES	**PAGE**
Large TC Nozzle Holders	4
Large Ultra-Polished Nozzles	4
TC Hard-Hitter Nozzles	4
1/4" Meg. NPT Hard Hitters	4
1/4" NPT TC Hard Hitters	4
1/2" NPT Long Hard Hitters	5
Fan Tip Nozzles	5
Gun Barrel Style	5
15K Monroe-Jet Orbital Nozzles	5
15K Pineapple Line Mole Nozzles	6
Stainless and Tungsten Insert Nozzles	6
Nozzle Flow Charts	7-9
FITTINGS	**PAGE**
Reducer Bushings	10
MP Male to NPT Reducer Bushings	10
12-15K Swage Adaptors	10
Metric/BSP to NPT Adaptors	10
12-15K Heavy Duty Couplings	10
Hex Head Plugs	10
Socket Head Plugs	10
10-15K Slimline Couplings	10
MP x NPT Slimline Couplings	10

FITTINGS (Cont'd)	PAGE
12-15K Hex Nipples	10
Type M x NPT (M) Adapters	10
One-Piece and Torpedo Adaptors	10
15K Adaptors M33	11
15K Bushings	11
Quick Disconnect Couplings	12
Kemper Hammer Unions	13
Screw-Type Hammer Unions	13
Wafer Tees, Elbows, Wyes	13
Wafer Crosses	13
LANCES & RELATED	**PAGE**
Rigid Lances, 304 SS & 4130 CS	14
Rigid Lance Holder	15
Dual Lance Manifolds	15
Stingers & Pipe Nipples	15
Chicken Wing	16
Flex Lance Safety Grips	17
CONTROL GUNS	**PAGE**
Foot Operated Dump Guns	18-19
Air-Operated Dump Valves	20
3/8" NPT Hand Held Dump Guns	21
1/2" NPT Hand Held Dump Guns	22
3/8" Double-Dump Hand Guns	23
1/2" Zero-Thrust Hand Guns	24
ACCESSORIES	**PAGE**
Flow Divider Valve	25
PRV	26
Gauges	27
Water Blasting Pressure Gauges	27
Tools	27
Lubricants, Sealants & Tapes	31
SAFETY ACCESSORIES	**PAGE**
Whip Checks	17
Rupture Disc Holder w/Safety Shroud, Rupture Discs	28
Gun Whip Hoses with Safety Shrouds	28
TurtleSkin High Pressure WaterArmor for Safety	29-30
Conditions of Sale & Warranty	32

All contents of this catalog are copyrighted 2014 by
Advanced Pressure Systems, LP, Tomball, Texas
Permission must be granted before reproducing any part of this publication.

15K NOZZLES

15K AP Standard Nozzles

The economical APS stainless steel AP Standard style nozzles come in pressure ratings to match your flex or rigid lances. The 15K-AP features FNPT threads to go with lances with MNPT threads, a slimline design that makes it easy to move through almost any size of tubing, and a wide range of options for precision drilled orifices.

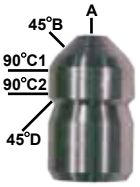

Part #	15K-AP FNPT	Diameter	Length
15-001-001	1/16" NPT	0.375" (9.53mm)	0.875" (22.23mm)
15-001-011	1/8" NPT	0.468" (11.91mm)	0.937" (23.81mm)
15-001-016	1/8" NPT	0.500" (13.88mm)	1.250" (31.75mm)
15-001-021	1/4" NPT	0.625" (15.88mm)	1.250" (31.75mm)
15-001-031	3/8" NPT	0.875" (22.23mm)	1.437" (36.50mm)
15-001-041	1/2" NPT	1.000" (25.40mm)	1.625" (41.28mm)
15-001-051	3/4" NPT	1.250" (31.75mm)	2.000" (50.80mm)
15-001-061	1" NPT	1.625" (41.28mm)	2.250" (57.15mm)

15K FNPT Nozzles

The **FNPT nozzles** are to be used in rotary applications for the removal of hardened plugs in heat exchanger tubes. This 15K nozzle NPT threads to go with lances with MNPT threads, a slimline design that makes it easy to move through almost any size of tubing, and a wide range of options for precision drilled orifices.

Part #	15K-FNPT	Diameter	Length
15-002-001	1/16" FNPT	0.375" (9.53mm)	0.875" (22.23mm)
15-002-011	1/8" FNPT	0.468" (11.91mm)	0.937" (23.81mm)
15-002-021	1/4" FNPT	0.625" (15.88mm)	1.250" (31.75mm)
15-002-031	3/8" FNPT	0.875" (22.23mm)	1.437" (36.50mm)
15-002-041	1/2" FNPT	1.000" (25.40mm)	1.625" (41.28mm)

15K Multi-Groove Nozzles

The **APS** high production stainless steel Multi-Groove nozzles come in pressure ratings to match your flex or rigid lances. The 15K-MG features FNPT threads to go with lances with MNPT threads. The Multi-Grooves have wrench flats for easy installation on the lance, and offer many options for up to 4 rows of precision drilled orifices. Please specify drilling pattern, pressure and flow when ordering.

Part #	15K-MG FNPT	Diameter	Length
15-003-001	1/16" NPT	0.375" (9.53mm)	1.281" (32.54mm)
15-003-011	1/8" NPT	0.468" (11.91mm)	1.625" (41.28mm)
15-003-021	1/4" NPT	0.625" (15.88mm)	1.625" (41.28mm)
15-003-031	3/8" NPT	0.875" (22.23mm)	1.875" (47.62mm)
15-003-041	1/2" NPT	1.000" (25.40mm)	2.043" (51.89mm)

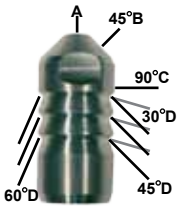

15K Button Tip Flex Lance Nozzles

The **APS** Button-Tip compact stainless steel nozzles come in pressure ratings to match your flex lances. They are ideal for cleaning small diameter tubes with small radius bends. The 15K-BT features FNPT threads to go with lances with MNPT threads. All offer many options for precision drilled orifices.

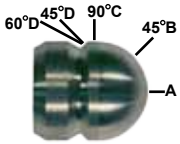

Part #	15K-BT FNPT	Diameter	Length
15-004-001	1/16" NPT	0.375" (9.53mm)	0.500" (12.70mm)
15-004-011	1/8" NPT	0.468" (11.91mm)	0.590" (14.98mm)
15-004-021	1/4" NPT	0.625" (15.88mm)	0.825" (20.96mm)
15-004-031	3/8" NPT	0.875" (22.23mm)	1.000" (25.40mm)
15-004-041	1/2" NPT	1.000" (25.40mm)	1.125" (28.58mm)
15-004-051	3/4" NPT	1.250"	1.625

15K Penetrator Nozzles

The **APS** Penetrator stainless steel nozzles are used with rigid or flex lances with MNPT threads. The rounded nose shape permits a range of forward and side drilling patterns while the backwards facing ridge allows a large number of pulling orifices to more efficiently clean fouled tubing. Wrench flats allow for easy installation.

Part #	15K-PT FNPT	Diameter	Length
15-005-001	1/16" NPT	0.375" (9.53mm)	1.312" (33.32mm)
15-005-011	1/8" NPT	0.468" (11.91mm)	1.500" (38.10mm)
15-005-021	1/4" NPT	0.625" (15.88mm)	1.750" (44.45mm)
15-005-031	3/8" NPT	0.875" (22.23mm)	1.812" (46.02mm)
15-005-041	1/2" NPT	1.000" (25.40mm)	2.062" (52.37mm)

15K Evaporator Nozzles

The **APS** Evaporator stainless steel nozzles are used with rigid or flex lances with MNPT threads. The design permits a range of forward and side drilling patterns while the backwards facing ridge allows a large number of pulling orifices to more efficiently clean fouled tubing. Wrench flats allow for easy installation.

Part #	15K-EVNPT	Diameter	Length
15-006-001	1/16" NPT	0.375" (9.53mm)	1.343" (34.11mm)
15-006-011	1/8" NPT	0.468" (11.91mm)	1.437" (36.50mm)
15-006-021	1/4" NPT	0.625" (15.88mm)	1.687" (42.85mm)
15-006-031	3/8" NPT	0.875" (22.23mm)	1.812" (46.02mm)
15-006-041	1/2" NPT	1.000" (25.40mm)	2.060" (52.32mm)

15K TLX Nozzles

The **APS** stainless steel TLX nozzles come in pressure ratings to match your flex or rigid lances. The 15K-TLX features FNPT threads to go with lances with MNPT threads.
All have wrench flats for easy installation on the lance.
All offer many options for 3 or 4 rows of precision drilled orifices.

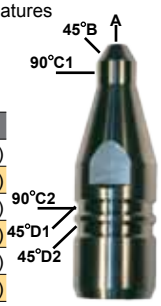

Part #	15K-TLX NPT	Diameter	Length
15-007-001	1/16" NPT	0.375" (9.53mm)	1.468" (37.29mm)
15-007-011	1/8" NPT	0.468" (11.91mm)	1.625" (41.27mm)
15-007-021	1/4" NPT	0.625" (15.88mm)	1.875" (47.63mm)
15-007-031	3/8" NPT	0.875" (22.23mm)	2.813" (71.45mm)
15-007-041	1/2" NPT	1.000" (25.40mm)	3.000" (76.20mm)
15-007-051	3/4" NPT	1.000" (25.40mm)	3.000" (76.20mm)

15K MMS Nozzles

The **APS** stainless steel Male Machine Screw nozzles come in pressure ratings to match your flex or rigid lances with female machine screw threads (UNF or UNC). The compact 15K-MMS has a special slimline design that assures that the outside diameter matches the OD of the lance, and have wrench flats for easy installation. All offer many options for 3 or 4 rows of precision drilled orifices.

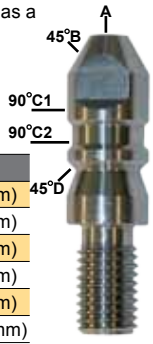

Part #	15K-MMS NPT	Diameter	Length
15-008-000	10-24 UNF	0.250" (6.35mm)	1.062" (26.97mm)
15-008-001	12-28 UNF	0.250" (6.35mm)	1.062" (26.97mm)
15-008-002	1/4"-28 UNF	0.312" (7.92mm)	1.250" (31.75mm)
15-008-003	5/16"-24 UNF	0.406" (10.32mm)	1.437" (36.50mm)
15-008-005	3/8"-24 UNF	0.562" (14.27mm)	1.750" (44.45mm)
15-008-006	1/2"-20 UNF	0.687" (17.45mm)	1.875" (47.625mm)

15K Thruster Nozzles

The **APS** Thruster stainless steel nozzles are used with flex lances in conjunction with another tube cleaning nozzle. It allows one to "stack" the nozzles so that additional jets can be used for a more thorough cleaning.

Part #	15K-Thruster	Diameter	Length
15-101-001	1/16" NPT	0.375" (9.53mm)	1.250" (31.75mm)
15-101-011	1/8" NPT	0.468" (11.89mm)	1.437" (36.50mm)
15-101-021	1/4" NPT	0.625" (15.88mm)	1.500" (38.10mm)
15-101-031	3/8" NPT	0.875" (22.23mm)	1.843" (46.81mm)
15-101-041	1/2" NPT	1.0" (25.40mm)	2.0" (50.80mm)
15-101-051	3/4" NPT	1.25" (31.75mm)	2.250" (57.15mm)
15-101-061	1" NPT	1.625" (41.28mm)	2.437" (61.90mm)

15K Standard Nozzles with Carbide Blade

The **APS** tungsten carbide tipped tube nozzles are to be used in rotary applications for the removal of hardened plugs in heat exchanger tubes.

Part #	15K-SCBN	Diameter	Length
15-029-101	1/16" NPT	0.375" (9.53mm)	0.875" (22.23mm)
15-029-111	1/8" NPT	0.468" (11.89mm)	0.937" (23.80mm)
15-029-121	1/4" NPT	0.625" (15.88mm)	1.250" (31.75mm)
15-029-131	3/8" NPT	0.875" (22.23mm)	1.437" (36.50mm)
15-029-141	1/2" NPT	1.0" (25.40mm)	1.625" (41.28mm)

Typical Tube Nozzle Drill Patterns

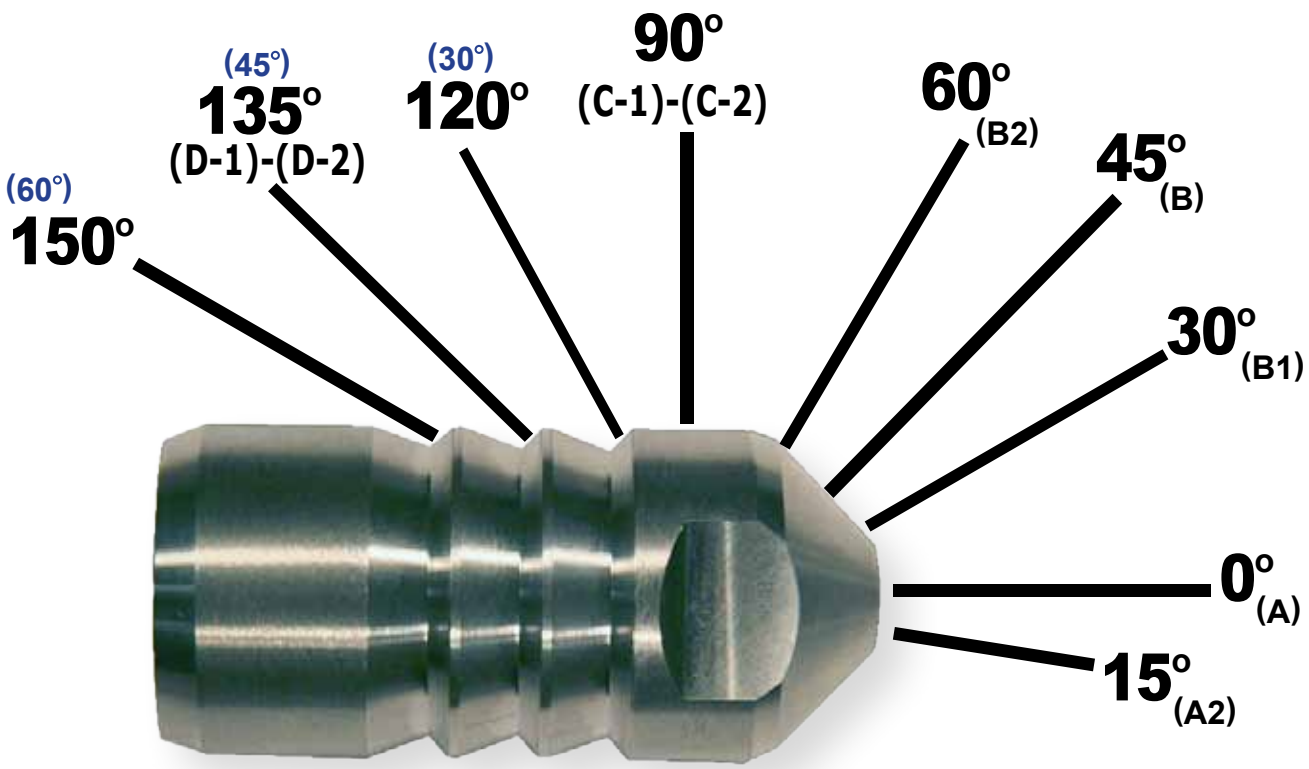

Use this handy reference when designing your customized drilled orifice locations. If you have any questions, call our highly experienced staff at **(281) 290-9950**, toll free at **(877) 290-4277** or e-mail us at: **sales-team@waterblast.pro**

15K TURBO NOZZLES

15K Turbo Nozzles The **APS** Turbo Nozzles provide the most thorough cleaning of tube walls with maximum impact without streaking. This nozzle also integrates, backward-facing orifices that propel them though hard deposits on the I.D. of pipes and tubes. At the same time, part of the nozzle rotates and polishes the pipe's I.D. We offer custom flow rates for your special applications. Turbo nozzle or blanks are used to cap the end of the nozzle (sold separately). Parts that are worn can be replaced in the field within five minutes with a simple rebuild kit to minimizing downtime.

Select an assembly and corresponding blank, replacement sleeves and assembly bodies also available.

Part #15-064-001
Turbo Nozzle Assembly **1/2"** NPT
#1 Flow Rate Body & Sleeve.

Part #15-061-001
Turbo Nozzle Assembly **1/8"** NPT
#1 Flow Rate Body & Sleeve.

Part #15-060-001
Turbo Nozzle Assembly **1/16"** NPT
#1 Flow Rate Body & Sleeve.

Part #15-059-001
Turbo Nozzle Assembly **5/16"-24** MMS
#1 Flow Rate Body & Sleeve.

Part #15-063-001
Turbo Nozzle Assembly **3/8"** NPT
#1 Flow Rate Body & Sleeve.

Part #15-062-001
Turbo Nozzle Assembly **1/4"** NPT
#1 Flow Rate Body & Sleeve.

Part ID	Spinner Nozzle Description	Nozzle Blank	Diameter	Length
15-059-001	TURBO NOZZLE ASSY, 5/16"-24 MMS #1 FLOW RATE BODY & SLEEVE	15-065-001	.406	2.560
15-059-002	TURBO NOZZLE ASSY, 5/16"-24 MMS #2 FLOW RATE BODY & SLEEVE	15-065-001	.406	2.560
15-059-003	BODY, 5/16"-24 MMS 15K TURBO NOZZLE			
15-059-004	SLEEVE, 5/16"-24 MMS #1 TURBO NOZZLE			
15-060-001	TURBO NOZZLE ASSY, 1/16" NPT #1 FLOW RATE BODY & SLEEVE	15-065-001	.375	2.470
15-060-002	TURBO NOZZLE ASSY, 1/16" NPT #2 FLOW RATE BODY & SLEEVE	15-065-001	.375	2.470
15-060-003	BODY, 1/16" NPT TURBO NOZZLE			
15-060-004	SLEEVE, 1/16" NPT #1 TURBO NOZZLE			
15-060-005	SLEEVE, 1/16" NPT #2 TURBO NOZZLE			
15-061-001	TURBO NOZZLE ASSY, 1/8" NPT #1 FLOW RATE BODY & SLEEVE	15-065-002	.500	2.535
15-061-002	TURBO NOZZLE ASSY, 1/8" NPT #2 FLOW RATE BODY & SLEEVE	15-065-002	.500	2.535
15-061-003	BODY, 1/8" NPT TURBO NOZZLE			
15-061-004	SLEEVE, 1/8" NPT #1 TURBO NOZZLE			
15-061-005	SLEEVE, 1/8" NPT #2 TURBO NOZZLE			
15-062-001	TURBO NOZZLE ASSY, 1/4" NPT #1 FLOW RATE BODY & SLEEVE	15-065-004	.687	3.000
15-062-002	TURBO NOZZLE ASSY, 1/4" NPT #2 FLOW RATE BODY & SLEEVE	15-065-004	.687	3.000
15-062-003	BODY, 1/4" NPT TURBO NOZZLE			
15-062-004	SLEEVE, 1/4" NPT #1 TURBO NOZZLE			
15-062-005	SLEEVE, 1/4" NPT #2 TURBO NOZZLE			
15-063-001	TURBO NOZZLE ASSY, 3/8" NPT #1 FLOW RATE BODY & SLEEVE	15-065-005	.875	3.200
15-063-002	TURBO NOZZLE ASSY, 3/8" NPT #2 FLOW RATE BODY & SLEEVE	15-065-005	.875	3.200
15-063-003	BODY, 3/8" NPT TURBO NOZZLE 15K SS			
15-063-004	SLEEVE, 3/8" NPT #1 TURBO NOZZLE (J/S TYPE: 51926)			
15-063-005	SLEEVE, 3/8" NPT #2 TURBO NOZZLE (J/S TYPE: 51927)			
15-064-001	TURBO NOZZLE ASSY, 1/2" NPT #1 FLOW RATE BODY & SLEEVE	15-065-006	1.040	3.670
15-064-002	TURBO NOZZLE ASSY, 1/2" NPT #2 FLOW RATE BODY & SLEEVE	15-065-006	1.040	3.670
15-064-003	BODY, 1/2" NPT TURBO NOZZLE 15K SS			
15-064-004	SLEEVE, 1/2" NPT #1 TURBO NOZZLE (J/S TYPE: 51941)			
15-064-005	SLEEVE, 1/2" NPT #2 TURBO NOZZLE (J/S TYPE: 51942)			

Part ID	Nozzle Blank Description	Turbo Assy	Diameter	Length
15-065-001	BLANK, 1/4" MP RH (J/S HPF1 TYPE) NOZZLE (F/ 1/16" NPT & 1/4" 20K TURBO ASSY.)	15-059-001, 15-059-002, 15-060-001, 15-060-002	.375	.875
15-065-002	BLANK, 3/8" MP RH (J/S HPF2 TYPE) NOZZLE (F/ 1/8" NPT & 3/8" 20K TURBO ASSY.)	15-061-001, 15-061-002	.500	1.053
15-065-003	BLANK, 9/16" MP RH (J/S HPF3 TYPE) NOZZLE (F/ 9/16" 20K TURBO ASSY.) Only		.750	1.320
15-065-004	BLANK, 1/2"-20 MP RH (J/S TYPE) NOZZLE (15K/20K) ((FOR 1/4" NPT TURBO NOZZLE)	15-062-001, 15-062-002	.665	1.312
15-065-005	BLANK, 5/8"-18 MP RH (J/S TYPE) NOZZLE (15K/20K) (FOR 3/8" NPT TURBO NOZZLE)	15-063-001, 15-063-002	.875	1.437
15-065-006	BLANK, 3/4"-16 MP RH (J/S TYPE) NOZZLE (15K/20K) (FOR 1/2" NPT TURBO NOZZLE)	15-064-001, 15-064-002	1.040	1.562

Size (NPT)	Flow Rate	Flow (gpm) at specified pressures (psi)													Flow (lpm) at specified pressures (bar)								
		3K	4K	5K	6K	7K	8K	9K	10K	11K	12K	13K	14K	15K	200	300	400	500	600	700	800	900	1000
1/16"	1	1.9	2.3	2.6	2.9	3.2	3.5	3.7	4.0	4.2	4.5	4.7	4.9	5.1	7.1	9.1	10.8	12.3	13.8	15.2	16.5	17.8	19.0
	2	3.0	3.5	4.0	4.4	4.8	5.2	5.6	5.9	6.2	6.6	6.9	7.2	7.5	11.1	13.9	16.3	18.6	20.6	22.6	24.4	26.2	27.9
1/8"	1	2.6	3.1	3.5	3.9	4.3	4.7	5.0	5.4	5.7	6.0	6.4	6.7	7.0	9.5	12.1	14.5	16.6	18.6	20.5	22.4	24.2	25.9
	2	5.0	5.9	6.7	7.4	8.0	8.7	9.3	9.9	10.4	11.0	11.5	12.0	12.5	18.7	23.4	27.4	31.1	34.5	37.7	40.7	43.6	46.4
1/4"	1	2.4	2.9	3.4	3.8	4.2	4.6	5.0	5.4	5.8	6.1	6.5	6.8	7.2	8.9	11.6	14.0	16.3	18.5	20.6	22.6	24.6	26.6
	2	5.2	6.2	7.0	7.8	8.5	9.2	9.9	10.6	11.2	11.8	12.4	13.0	13.5	19.5	24.5	28.9	33.0	36.8	40.3	43.8	47.0	50.2
3/8"	1	3.6	4.3	4.9	5.5	6.1	6.6	7.2	7.7	8.2	8.7	9.2	9.6	10.1	13.3	17.1	20.4	23.6	26.5	29.4	32.1	34.8	37.3
	2	7.0	8.2	9.3	10.4	11.3	12.2	13.1	14.0	14.8	15.5	16.3	17.1	17.8	26.1	32.7	38.5	43.8	48.7	53.3	57.7	61.9	65.9
1/2"	1	3.0	3.7	4.3	4.9	5.5	6.1	6.6	7.1	7.7	8.2	8.7	9.2	9.7	11.3	14.8	18.2	21.3	24.4	27.3	30.2	33.0	35.8
	2	6.7	7.9	9.0	10.0	11.0	12.0	12.9	13.7	14.6	15.4	16.2	17.0	17.8	24.7	31.3	37.2	42.6	47.7	52.5	57.1	61.6	65.9

Please specify drilling pattern, pressure and flow when ordering.

15K Large Tungsten Carbide Nozzle Assembly

APS offers these special large tungsten carbide hard-hitter nozzles for use in high flow applications where a solid stream of water is required for big cleaning jobs such as in paper mills, power plants, tube bundle cleaning, tank cleaning and reactor vessels.

These 3/4" threaded NPT nozzle holders come in a standard 2-3/4" long assembly, and also available in a shorter 2-1/8" long holder. The carbide insert comes in 11 different orifice sizes to suit your applications.

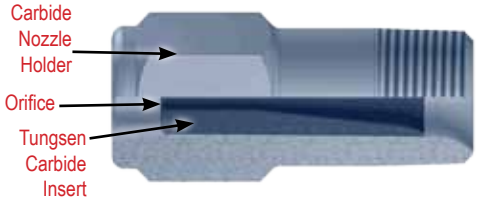

Complete Standard 2-3/4" Long Assembly	Carbide Insert Only:	Orifice Size:
15-028-000	**Carbide Nozzle Holder**	
15-028-109	15-027-109	0.109" (0.109mm)
15-028-125	15-027-125	0.125" (0.125mm)
15-028-140	15-027-140	0.140" (3.56mm)
15-028-156	15-027-156	0.156" (3.96mm)
15-028-165	15-027-165	0.165" (4.19mm)
15-028-172	15-027-172	0.172" (4.37mm)
15-028-187	15-027-187	0.187" (4.75mm)
15-028-203	15-027-203	0.203" (5.16mm)
15-028-218	15-027-218	0.218" (5.54mm)
15-028-250	15-027-250	0.250" (6.35mm)
15-028-312	15-027-312	0.312" (7.92mm)

15K 1/2" NPT Large Ultra-Polished Nozzles

APS offers these special ultra-polished nozzles for use in high flow applications where a straight jet of water is required for large cleaning applications. These are often used with shellside cleaners, but have many other uses.

These 1/2" NPT threaded nozzle holders come in a female assembly or a male assembly. The carbide insert comes in 12 different orifice sizes to suit your flow and pressure requirements.

Part #	Description
15-035-000	Female Holder
15-035-003	Male Holder
30-009-016	O-Ring

Carbide Insert Only:	Orifice Size:
15-035-062	0.062" (1.58mm)
15-035-071	0.071" (1.80mm)
15-035-078	0.078" (1.98mm)
15-035-083	0.083" (2.11mm)
15-035-089	0.089" (2.26mm)
15-035-093	0.093" (2.36mm)
15-035-109	0.109" (0.11mm)
15-035-125	0.125" (0.13mm)
15-035-140	0.140" (3.56mm)
15-035-156	0.156" (3.96mm)
15-035-165	0.165" (4.19mm)
15-035-172	0.172" (4.37mm)

15K Tungsten Carbide Hard Hitter Nozzles

The **APS** Tungsten Carbide Hard Hitter nozzles are designed especially for use with hand-held control guns for superior surface cleaning. All are made of stainless steel with tungsten carbide orifice inserts, flow straightening vanes, and wrench flats for easy installation. Replaceable carbide inserts are also available.

Part #	TCHH-15K	Jet Size
15-021-000	**Carbide Nozzle Holder**	
15-021-021	#021	0.021" (0.53mm)
15-021-024	#024	0.024" (0.61mm)
15-021-026	#1	0.026" (0.66mm)
15-021-031	#1.5	0.031" (0.79mm)
15-021-036	#2	0.036" (0.91mm)
15-021-039	#2.5	0.039" (0.99mm)
15-021-043	#3	0.043" (1.09mm)
15-021-047	#4	0.047" (1.19mm)
15-021-050	#4.5	0.050" (1.27mm
15-021-052	#5	0.052" (1.32mm)
15-021-055	#5.5	0.055" (1.40mm
15-021-059	#6	0.059" (1.50mm
15-021-060	#6.5	0.060" (1.52mm)
15-021-062	#7	0.062" (1.57mm)
15-021-065	#7.5	0.065" (1.65mm)
15-021-067	#8	0.067" (1.70mm)
15-021-069	#8.5	0.069" (1.75mm)
15-021-071	#9	0.071" (1.80mm)

Part #	TCHH-15K	Jet Size
15-021-073	#9.5	0.073" (1.85mm)
15-021-075	#10	0.075" (1.90mm)
15-021-077	#10.5	0.077" (1.95mm)
15-021-078	#11	0.078" (1.98mm)
15-021-080	#11.5	0.080" (2.03mm)
15-021-082	#12	0.082" (2.08mm)
15-021-085	#13	0.085" (2.16mm)
15-021-089	#14	0.089" (2.26mm)
15-021-093	#15	0.093" (2.36mm)
15-021-095	#16	0.095" (2.41mm)
15-021-100	#18	0.100" (2.54mm)
15-021-106	#20	0.106" (2.69mm)
15-021-109	#21	0.109" (2.77mm)
15-021-118	#25	0.118" (2.99mm
15-021-125	#27	0.125" (3.17mm)
15-021-130	#30	0.130" (3.30mm)
15-021-140	#35	0.140" (3.56mm)
15-021-156	#40	0.156" (3.96mm)

15K NPT VALVE, NOZZLE SHUT-OFF 1/2"

Part # 61-010-050

15K 1/4" Meg. MNPT Hard Hitter Nozzles

APS makes its 15K 1/4 Meg Hard Hitter Nozzles to bring exceptional power to control gun surface cleaning and cutting applications. The internal guide vane focuses flow for maximum performance. They are made from hardened stainless steel, and feature male NPT threads and wrench flats for easy installation.

Part #	15K-1/4 Meg	Jet Size
15-013-001	#2	0.036" (0.91mm)
15-013-002	#3	0.043" (1.09mm)
15-013-003	#4	0.047" (1.19mm)
15-013-004	#4.5	0.050" (1.27mm)
15-013-005	#5	0.052" (1.32mm)
15-013-006	#5.5	0.055" (1.40mm)
15-013-007	#6	0.059" (1.50mm)
15-013-008	#6.5	0.060" (1.52mm)
15-013-009	#7	0.062" (1.57mm)
15-013-010	#8	0.067" (1.70mm)
15-013-011	#8.5	0.069" (1.75mm)
15-013-012	#9	0.071" (1.80mm)
15-013-013	#10	0.075" (1.91mm)
15-013-014	#11	0.078" (1.98mm)

Part #	15K-1/4 Meg	Jet Size
15-013-015	#12	0.082" (2.08mm)
15-013-016	#13	0.085" (2.16mm)
15-013-017	#15	0.093" (2.36mm)
15-013-018	#16	0.095" (2.41mm)
15-013-019	#18	0.100" (2.54mm)
15-013-020	#20	0.106" (2.69mm)
15-013-021	#25	0.118" (2.99mm)
15-013-022	#30	0.130" (3.30mm)
15-013-023	#35	0.140" (3.57mm)

15K 1/4" NPT Tungsten Carbide Hard Hitter Nozzles

The **APS** Hydro-Style Tungsten Carbide Hard Hitter nozzles are designed especially for use with hand-held control guns for superior surface cleaning. All are made of stainless steel with tungsten carbide orifice inserts and wrench flats for easy installation. Replaceable carbide inserts are also available.

Part #	1/4TCHH	Jet Size
15-030-032	#1.6	0.032" (0.81mm)
15-030-047	#4	0.047" (1.19mm)
15-030-054	#5.5	0.054" (1.37mm)
15-030-062	#7	0.062" (1.57mm)
15-030-067	#8	0.067" (1.70mm)
15-030-078	#11	0.078" (1.98mm)
15-030-094	#15	0.094" (2.39mm)
15-030-125	#27	0.125" (3.17mm)
15-030-140	#35	0.140" (3.55mm)
15-030-156	#40	0.156" (3.96mm)

10-15K Standard 15° & 25° Fan Tip MNPT Nozzles

APS makes its 10-15K Standard Fan Tip Nozzles to bring exceptional power to control gun surface cleaning applications. They are available in 15°, 25° and 40°, made from hardened stainless steel, and feature male NPT threads and wrench flats for easy installation.

Part #	15°-FT-15K	Jet Size
15-014-000	#1	0.026" (0.66mm)
15-014-001	#2	0.036" (0.91mm)
15-014-002	#3	0.043" (1.09mm)
15-014-003	#4	0.046" (1.19mm)
15-014-004	#4.5	0.050" (1.27mm)
15-014-005	#5	0.052" (1.32mm)
15-014-006	#5.5	0.055" (1.39mm)
15-014-007	#6	0.059" (1.49mm)
15-014-008	#6.5	0.060" (1.52mm)
15-014-009	#7	0.062" (1.57mm)
15-014-010	#7.5	0.065" (1.65mm)
15-014-011	#8	0.067" (1.70mm)
15-014-012	#8.5	0.069" (1.75mm)
15-014-013	#9	0.071" (1.80mm)
15-014-014	#9.5	0.073" (1.85mm)
15-014-015	#10	0.075" (1.90mm)
15-014-016	#10.5	0.077" (1.95mm)
15-014-017	#11	0.078" (1.98mm)

Part #	15°-FT-15K	Jet Size
15-014-018	#11.5	0.080" (2.03mm)
15-014-019	#12	0.082" (2.08mm)
15-014-020	#12.5	0.084" (2.13mm)
15-014-021	#13	0.085" (2.16mm)
15-014-022	#14	0.089" (2.26mm)
15-014-023	#15	0.093" (2.36mm)
15-014-024	#16	0.095" (2.41mm)
15-014-025	#18	0.100" (2.54mm)
15-014-026	#20	0.106" (2.69mm)
15-014-027	#25	0.118" (2.99mm)
15-014-028	#30	0.130" (3.30mm)
15-014-029	#35	0.140" (3.55mm)

Part #	25°-FT-15K	Jet Size
15-015-001	#2	0.036" (0.91mm)
15-015-002	#3	0.043" (1.09mm)
15-015-003	#4	0.047" (1.19mm)
15-015-004	#4.5	0.050" (1.27mm)
15-015-005	#5	0.052" (1.32mm)
15-015-006	#5.5	0.055" (1.39mm)
15-015-007	#6	0.059" (1.49mm)
15-015-008	#6.5	0.060" (1.52mm)
15-015-009	#7	0.062" (1.57mm)
15-015-010	#7.5	0.065" (1.65mm)
15-015-011	#8	0.067" (1.70mm)
15-015-012	#8.5	0.069" (1.75mm)
15-015-013	#9	0.071" (1.80mm)
15-015-014	#9.5	0.073" (1.85mm)
15-015-015	#10	0.075" (1.90mm)
15-015-016	#10.5	0.077" (1.95mm)
15-015-017	#11	0.078" (1.98mm)
15-015-018	#11.5	0.080" (2.03mm)

Part #	25°-FT-15K	Jet Size
15-015-019	#12	0.082" (2.08mm)
15-015-020	#12.5	0.084" (2.13mm)
15-015-021	#13	0.085" (2.16mm)
15-015-022	#14	0.089" (2.26mm)
15-015-023	#15	0.093" (2.36mm)
15-015-024	#16	0.095" (2.41mm)
15-015-025	#18	0.100" (2.54mm)
15-015-026	#20	0.106" (2.69mm)
15-015-027	#25	0.118" (2.99mm)
15-015-028	#30	0.130" (3.30mm)
15-015-029	#35	0.140" (3.55mm)

15K Tungsten Carbide 15° & 25° Fan Tip MNPT Nozzles

APS makes its 15K TC Fan Tip Nozzles to bring exceptional power to control gun surface cleaning applications. They are available in 15° and 25°, made from hardened stainless steel inserted with a tungsten carbide orifice, and feature male NPT threads and wrench flats for easy installation.

Part #	15°-TCFT-15K	Jet Size
15-016-001	#2	0.036" (0.91mm)
15-016-002	#3	0.043" (1.09mm)
15-016-003	#4	0.046" (1.19mm)
15-016-005	#5	0.052" (1.32mm)
15-016-007	#6	0.059" (1.50mm)
15-016-009	#7	0.062" (1.57mm)
15-016-011	#8	0.067" (1.70mm)
15-016-013	#9	0.071" (1.80mm)
15-016-015	#10	0.075" (1.91mm)
15-016-017	#11	0.078" (1.98mm)
15-016-019	#12	0.082" (2.08mm)
15-016-023	#15	0.093" (2.36mm)

Part #	25°-TCFT-15K	Jet Size
15-017-001	#2	0.036" (0.91mm)
15-017-002	#3	0.043" (1.09mm)
15-017-003	#4	0.046" (1.19mm)
15-017-005	#5	0.052" (1.32mm)
15-017-007	#6	0.059" (1.50mm)
15-017-009	#7	0.062" (1.57mm)
15-017-011	#8	0.067" (1.70mm)
15-017-013	#9	0.071" (1.80mm)
15-017-015	#10	0.075" (1.90mm)
15-017-017	#11	0.078" (1.98mm)
15-017-019	#12	0.082" (2.08mm)
15-017-023	#15	0.093" (2.36mm)

15K 1/2" NPT Long Hard Hitter Nozzles

The 1/2" NPT Long Hard Hitter nozzles offer an elongated orifice that holds a pattern longer than some of the shorter nozzles on the market. Great for hand-held shotgunning as well as mechanical cleaning tools such as shellside machines and tower cleaners.

Part #	3" Long HH	Jet Size
15-036-109	#21	0.109"
15-036-125	#27	0.125"
15-036-140	#35	0.140"
15-036-156	#40	0.156"
15-036-172	#52	0.172"
15-036-187	#60	0.187"
15-036-203	#70	0.203"
15-036-219	#90	0.219"
15-036-234	#95	0.234"
15-036-250	#100	0.250"

Part #	6" Long HH	Jet Size
15-038-109	#21	0.109"
15-038-125	#27	0.125"
15-038-140	#35	0.140"
15-038-156	#40	0.156"
15-038-172	#52	0.172"
15-038-187	#60	0.187"
15-038-203	#70	0.203"
15-038-219	#90	0.219"
15-038-234	#95	0.234"
15-038-250	#100	0.250"

If you don't see what you are looking for or just have a question, call toll free in North America 1 (877) 290-4277 or (281) 290-9950.

15K Gun Barrel Style Hard Hitter MNPT Nozzles

APS makes its 15K Gun Barrel Hard Hitter Nozzles to bring exceptional power to control guns. Each is made from heat treated stainless steel, and features male NPT threads and wrench flats for easy installation. Please specify pressure and flow when ordering.

Part #	GBHH-15K	Jet Size
15-010-026	#026	0.026" (0.66mm)
15-010-028	#028	0.031" (0.79mm)
15-010-031	#031	0.031" (0.79mm)
15-010-036	#2	0.036" (0.91mm)
15-010-043	#3	0.043" (1.09mm)
15-010-047	#4	0.047" (1.19mm)
15-010-050	#4.5	0.050" (1.27mm)
15-010-052	#5	0.052" (1.32mm)
15-010-055	#5.5	0.055" (1.39mm)
15-010-059	#6	0.059" (1.50mm)
15-010-060	#6.5	0.060" (1.52mm)
15-010-062	#7	0.062" (1.57mm)
15-010-065	#7.5	0.065" (1.65mm)
15-010-067	#8	0.067" (1.70mm)
15-010-069	#8.5	0.069" (1.75mm)
15-010-071	#9	0.071" (1.80mm)
15-010-073	#9.5	0.073" (1.85mm)
15-010-075	#10	0.075" (1.90mm)
15-010-077	#10.5	0.077" (1.95mm)
15-010-078	#11	0.078" (1.98mm)

Part #	GBHH-15K	Jet Size
15-010-080	#11.5	0.080" (2.03mm)
15-010-082	#12	0.082" (2.08mm)
15-010-084	#12.5	0.084" (2.13mm)
15-010-085	#13	0.085" (2.16mm)
15-010-089	#14	0.089" (2.26mm)
15-010-093	#15	0.093" (2.36mm)
15-010-094	#15	0.093" (2.36mm)
15-010-095	#16	0.095" (2.41mm)
15-010-100	#18	0.100" (2.54mm)
15-010-106	#20	0.106" (2.69mm)
15-010-111	#21	0.111" (2.69mm)
15-010-118	#25	0.118" (3.00mm)
15-010-125	#27	0.125" (3.18mm)
15-010-130	#30	0.130" (3.30mm)
15-010-140	#35	0.140" (3.56mm)
15-010-156	#40	0.156" (3.96mm)
15-010-167	#50	0.167" (4.24mm)
15-010-187	#60	0.187" (3.56mm)

10-15K Monroe-Jet Orbital Nozzles

APS proudly offers the Monroe-Jet orbital nozzles in a wide variety of flows and pressure ratings to suit your application. 3/8" NPT inlet threads are available upon request. Please specify orifice size and flow when ordering.

Part #	PSI / Flow	Orifice	Connection
15-200-028	10K @ 2.0 GPM	.029" / .70 mm	1/2" NPT (F)
15-200-030	15K @ 2.3 GPM	.030" / .75 mm	1/2" NPT (F)
15-200-031	15K @ 2.6 GPM	.031" / .80 mm	1/2" NPT (F)
15-200-033	15K @ 3.0 GPM	.033" / .85 mm	1/2" NPT (F)
15-200-035	15K @ 3.3 GPM	.033" / .90 mm	1/2" NPT (F)
15-200-037	15K @ 3.7 GPM	.037" / .95 mm	1/2" NPT (F)
15-200-039	15K @ 4.1 GPM	.039" / 1.0 mm	1/2" NPT (F)
15-200-041	15K @ 4.5 GPM	.041" / 1.05 mm	1/2" NPT (F)
15-200-043	15K @ 5.0 GPM	.043" / 1.10 mm	1/2" NPT (F)
15-200-045	15K @ 5.4 GPM	.045" / 1.15 mm	1/2" NPT (F)
15-200-047	15K @ 5.9 GPM	.047" / 1.20 mm	1/2" NPT (F)
15-200-049	15K @ 6.4 GPM	.049" / 1.25 mm	1/2" NPT (F)
15-200-051	15K @ 7.0 GPM	.051" / 1.30 mm	1/2" NPT (F)
15-200-053	15K @ 7.5 GPM	.053" / 1.35 mm	1/2" NPT (F)
15-200-055	15K @ 8.1 GPM	.055" / 1.40 mm	1/2" NPT (F)

15K APLM Pineapple Line Mole Nozzles

The **APS** APLM pineapple-type line mole nozzles are made from stainless steel with a special copper coating to prevent galling during installation. APLM nozzles have 1" NPT inlets with 1/4" NPT (F) ports, and a choice of port locations. These are used with line mole inserts listed on the next page. Wrench flats allow for easy installation.

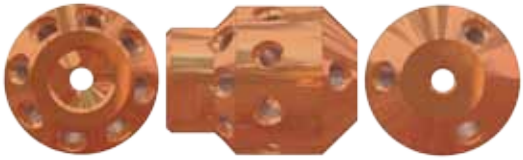

Part #	15K-APLM	Dimensions	Patterns
15-018-200	Standard	3-3/4" L x 3" Dia.	1 front, 3 forward (45°), 8 side-back (15°), 8 back (45°)
15-018-201	Radial	3-3/4" L x 3" Dia.	1 front, 3 forward (45°), 8 side-radial (90°), 8 back (45°)

15K BPLM Pineapple Line Mole Nozzles

The **APS** APLM pineapple-type line mole nozzles are made from stainless steel with a special copper coating to help prevent galling during installation. APLM nozzles have 1/2" NPT or 3/4" NPT inlets with 1/4" NPT (F) ports, and a choice of port locations. These are used with line mole inserts listed on the next page. Wrench flats allow for easy installation.

Part #	15K-BPLM	Dimensions	Patterns
15-018-202	1/2" Standard	3-1/2" L x 2-1/4" Dia.	1 front, 3 forward (45°), 6 side-back (15°), 6 back (45°)
15-018-203	1/2" Radial	3-1/2" L x 2-1/4" Dia.	1 front, 3 forward (45°), 6 side-radial (90°), 6 back (45°)
15-018-204	3/4" Standard	3-1/2" L x 2-1/4" Dia.	1 front, 3 forward (45°), 6 side-back (15°), 6 back (45°)
15-018-205	3/4" Radial	3-1/2" L x 2-1/4" Dia.	1 front, 3 forward (45°), 6 side-radial (90°), 6 back (45°)

15K CPLM Pineapple Line Mole Nozzles

The **APS** CPLM pineapple-type line mole nozzles are made from stainless steel with a special copper coating to prevent galling during installation. CPLM nozzles have 1/2" NPT inlets with 1/4" NPT (F) ports, and a choice of port locations. These are used with line mole inserts listed on the next page. Wrench flats allow for easy installation.

Part #	15K-CPLM	Dimensions	Patterns
15-018-206	Standard	2-1/2" L x 1-5/8" Dia.	1 front, 3 back (45°)

15K DPLM Pineapple Line Mole Nozzles

The APS DPLM pineapple-type line mole nozzles are made from stainless steel with a special copper coating to prevent galling during installation. DPLM nozzles have 3/4" NPT inlets with 1/8" NPTF ports, and a choice of port locations. These are used with line mole inserts listed on the next page. Wrench flats allow for easy installation.

Part #	15K-DPLM	Dimensions	Patterns
15-018-207	Standard	3-3/4" L x 1-5/8" Dia.	1 front, 3 forward (45°), 6 back (15°), 6 back (45°)

15K EPLM Pineapple Line Mole Nozzles

The **APS** EPLM pineapple-type line mole nozzles are made from stainless steel with a special copper coating to prevent galling during installation. EPLM nozzles have 1/2" NPT inlets with 1/16" NPT (F) ports, and a choice of port locations. These are used with line mole inserts listed on the next page. Wrench flats allow for easy installation.

Part #	15K-EPLM	Dimensions	Patterns
15-018-208	Standard	2-3/4" L x 1-1/8" Dia.	1 front, 3 forward (45°), 6 back (45°)

Part #	1/4" NPT Jet
15-018-016	0.016" (0.41mm)
15-018-018	0.018" (0.46mm)
15-018-020	0.020" (0.51mm)
15-018-021	0.021" (0.53mm)
15-018-022	0.022" (056mm)
15-018-024	0.024" (0.61mm)
15-018-026	0.026" (066mm)
15-018-028	0.028" (0.71mm)
15-018-029	0.029" (0.74mm)
15-018-031	0.031" (0.79mm)
15-018-036	0.036" (0.91mm)
15-018-043	0.043" (1.09mm)
15-018-047	0.047" (1.19mm)
15-018-050	0.050" (1.27mm)
15-018-052	0.052" (1.32mm)
15-018-055	0.055" (1.39mm)
15-018-059	0.059" (1.50mm)
15-018-062	0.062" (1.57mm)
15-018-067	0.067" (1.70mm)
15-018-070	0.070" (1.78mm)
15-018-076	0.076" (1.93mm)
15-018-082	0.082" (2.08mm)
15-018-085	0.085" (2.16mm)
15-018-093	0.093" (2.36mm)
15-018-100	0.100" (2.54mm)
15-018-118	0.118" (3.00mm)
15-018-125	0.125" (3.18mm)

10-15K Stainless Line Mole Nozzle Inserts

Part #	1/8" NPT Jet
15-118-016	0.016" (0.41mm)
15-118-021	0.021" (0.53mm)
15-118-024	0.024" (0.61mm)
15-118-026	0.026" (0.66mm)
15-118-028	0.028" (0.71mm)
15-118-031	0.031" (0.79mm)
15-118-036	0.036" (0.91mm)
15-118-043	0.043" (1.09mm)
15-118-047	0.047" (1.19mm)
15-118-050	0.050" (1.27mm)
15-118-052	0.052" (1.32mm)
15-118-055	0.055" (1.40mm)
15-118-059	0.059" (1.50mm)
15-118-062	0.062" (1.57mm)
15-118-067	0.067" (1.70mm)
15-118-070	0.070" (1.78mm)
15-118-076	0.076" (1.93mm)
15-118-082	0.082" (2.08mm)
15-118-085	0.085" (2.16mm)
15-118-093	0.093" (2.36mm)
15-118-100	0.100" (2.54mm)
15-118-118	0.118" (3.00mm)
15-118-125	0.125" (3.18mm)

Part #	1/16" NPT Jet
15-218-016	0.016" (0.41mm)
15-218-021	0.021" (0.53mm)
15-218-024	0.024" (0.61mm)
15-218-026	0.026" (066mm)
15-218-028	0.028" (0.71mm)
15-218-031	0.031" (0.79mm)
15-218-036	0.036" (0.91mm)
15-218-043	0.043" (1.09mm)
15-218-047	0.047" (1.19mm)
15-218-050	0.050" (1.27mm)
15-218-052	0.052" (1.32mm)
15-218-055	0.055" (1.39mm)
15-218-059	0.059" (1.50mm)
15-218-062	0.062" (1.57mm)
15-218-067	0.067" (1.70mm)
15-218-070	0.070" (1.78mm)
15-218-076	0.076" (1.93mm)
15-218-082	0.082" (2.08mm)
15-218-085	0.085" (2.16mm)
15-218-093	0.093" (2.36mm)
15-218-100	0.100" (2.54mm)
15-218-118	0.118" (3.00mm)
15-218-125	0.125" (3.18mm)

10-15K Tungsten Line Mole Nozzle Inserts

Part #	1/4" NPT	Jet Size
15-019-021	#021	0.021" (0.53mm)
15-019-024	#024	0.024" (0.61mm)
15-019-026	#1	0.026" (0.66mm)
15-019-031	#1.5	0.031" (0.79mm)
15-019-036	#2	0.036" (0.91mm)
15-019-039	#2.5	0.039" (0.99mm)
15-019-043	#3	0.043" (1.09mm)
15-019-047	#4	0.047" (1.19mm)
15-019-050	#4.5	0.050" (1.27mm)
15-019-052	#5	0.052" (1.32mm)
15-019-055	#5.5	0.055" (1.40mm)
15-019-059	#6	0.059" (1.50mm)
15-019-060	#6.5	0.060" (1.52mm)
15-019-062	#7	0.062" (1.57mm)
15-019-065	#7.5	0.065" (1.65mm)
15-019-067	#8	0.067" (1.70mm)
15-019-069	#8.5	0.069" (1.75mm)
15-019-071	#9	0.071" (1.80mm)
15-019-073	#9.5	0.073" (1.85mm)
15-019-075	#10	0.075" (1.90mm)

Part #	1/4" NPT	Jet Size
15-019-077	#10.5	0.077" (1.95mm)
15-019-078	#11	0.078" (1.98mm)
15-019-080	#11.5	0.080" (2.03mm)
15-019-082	#12	0.082" (2.08mm)
15-019-085	#13	0.085" (2.16mm)
15-019-089	#14	0.089" (2.26mm)
15-019-093	#15	0.093" (2.36mm)
15-019-095	#16	0.095" (2.41mm)
15-019-100	#18	0.100" (2.54mm)
15-019-106	#20	0.106" (2.69mm)
15-019-109	#21	0.109" (2.77mm)
15-019-118	#25	0.118" (2.99mm)
15-019-125	#27	0.125" (3.17mm)
15-019-130	#30	0.130" (3.30mm)
15-019-140	#35	0.140" (3.55mm)
15-019-156	#40	0.156" (3.96mm)
15-019-165	#50	0.165" (4.19mm)

15K Sand Eductor Nozzles

APS proudly offers a Sand Eductor nozzles.

Part #	Description
15-012-000	15K Complete Sand Eductor

ITEM	PART #	DESCRIPTION
1	**15-012-001**	Inlet Adapter/Nozzle Holder for Sand Eductor
2	**15-012-002**	Housing for Sand Eductor
3	**15-012-003**	Tungsten Carbide Nozzle Assembly (.187)
3	**15-012-004**	Tungsten Carbide Nozzle Assembly (.250)
3	**15-012-005**	Tungsten Carbide Nozzle Assembly (.312)
3	**15-012-006**	Tungsten Carbide Nozzle Assembly (.375)
4	**20-200-001**	1/2" Street Elbow 45 Plated
5	**30-001-910**	O-Ring
7	**15-013-000**	1/4" NPT Meg Nozzle (Size to suit flow)

15K - DRILLED NOZZLE FLOWS

Nozzle Number	Orifice Diam./In.	2,000 PSI	4,000 PSI	5,000 PSI	6,000 PSI	7,000 PSI	8,000 PSI	9,000 PSI
0.12	0.012	0.154	0.218	0.244	0.267	0.288	0.308	0.327
0.13	0.013	0.181	0.256	0.286	0.313	0.338	0.362	0.384
0.14	0.014	0.210	0.297	0.332	0.363	0.392	0.419	0.445
0.15	0.015	0.241	0.340	0.381	0.417	0.450	0.481	0.511
0.16	0.016	0.274	0.387	0.433	0.474	0.512	0.548	0.581
0.18	0.018	0.347	0.490	0.548	0.600	0.649	0.693	0.735
0.2	0.020	0.428	0.605	0.677	0.741	0.801	0.856	0.908
0.21	0.021	0.472	0.667	0.746	0.817	0.883	0.944	1.001
0.22	0.022	0.518	0.732	0.819	0.897	0.969	1.036	1.099
0.24	0.024	0.616	0.872	0.974	1.067	1.153	1.233	1.307
0.25	0.025	0.669	0.946	1.057	1.158	1.251	1.337	1.419
0.26	0.026	0.723	1.023	1.144	1.253	1.353	1.447	1.534
0.28	0.028	0.839	1.186	1.326	1.453	1.569	1.678	1.780
0.31	0.031	1.028	1.454	1.626	1.781	1.924	2.057	2.181
0.32	0.032	1.096	1.550	1.732	1.898	2.050	2.191	2.324
2	0.036	1.387	1.961	2.193	2.402	2.594	2.773	2.942
3	0.043	1.978	2.798	3.128	3.427	3.701	3.957	4.197
4	0.047	2.364	3.343	3.737	4.094	4.422	4.727	5.014
4.5	0.050	2.675	3.783	4.229	4.633	5.004	5.350	5.674
5	0.052	2.893	4.092	4.575	5.011	5.413	5.786	6.137
5.5	0.055	3.237	4.577	5.118	5.606	6.055	6.473	6.866
6	0.059	3.725	5.267	5.889	6.451	6.968	7.449	7.901
6.5	0.060	3.852	5.447	6.090	6.672	7.206	7.704	8.171
7	0.062	4.113	5.817	6.503	7.124	7.695	8.226	8.725
7.5	0.065	4.521	6.393	7.148	7.830	8.457	9.041	9.590
8	0.067	4.803	6.793	7.594	8.319	8.986	9.606	10.189
8.5	0.069	5.094	7.204	8.055	8.823	9.530	10.188	10.806
9	0.071	5.394	7.628	8.528	9.342	10.091	10.788	11.442
9.5	0.073	5.702	8.064	9.016	9.876	10.667	11.404	12.096
10	0.075	6.019	8.512	9.516	10.425	11.260	12.037	12.768
10.5	0.077	6.344	8.972	10.031	10.988	11.868	12.688	13.458
11	0.078	6.510	9.206	10.293	11.275	12.179	13.020	13.809
11.5	0.080	6.848	9.684	10.828	11.861	12.811	13.696	14.527
12	0.082	7.195	10.175	11.376	12.461	13.460	14.389	15.262
12.5	0.084	7.550	10.677	11.937	13.077	14.124	15.100	16.016
13	0.085	7.731	10.933	12.223	13.390	14.463	15.461	16.399
14	0.089	8.475	11.986	13.401	14.680	15.856	16.951	17.979
15	0.093	9.254	13.088	14.632	16.029	17.313	18.509	19.631
16	0.095	9.657	13.657	15.268	16.726	18.066	19.313	20.485
18	0.100	10.700	15.132	16.918	18.533	20.018	21.400	22.698
20	0.106	12.022	17.002	19.009	20.823	22.492	24.045	25.503
21	0.109	12.713	17.978	20.100	22.019	23.783	25.425	26.967
25	0.118	14.898	21.070	23.557	25.805	27.873	29.797	31.604
27	0.125	16.719	23.644	26.434	28.957	31.278	33.437	35.465
30	0.130	18.083	25.573	28.591	31.320	33.830	36.166	38.359
35	0.140	20.972	29.659	33.159	36.324	39.235	41.943	44.488
40	0.156	26.039	36.825	41.172	45.101	48.715	52.078	55.237
50	0.167	29.841	42.201	47.183	51.686	55.827	59.682	63.302
60	0.187	37.416	52.915	59.160	64.807	70.000	74.833	79.372
70	0.203	44.093	62.357	69.717	76.371	82.491	88.186	93.536
80	0.210	47.186	66.732	74.608	81.729	88.278	94.373	100.098
90	0.219	51.318	72.574	81.140	88.885	96.007	102.635	108.861
100	0.250	66.874	94.574	105.737	115.829	125.110	133.748	141.862

15K - DRILLED NOZZLE FLOWS

Nozzle Number	Orifice Diam./In.	10,000 PSI	15,000 PSI	20,000 PSI	25,000 PSI	30,000 PSI	36,000 PSI	40,000 PSI
0.12	0.012	0.345	0.422	0.487	0.545	0.597	0.654	0.689
0.13	0.013	0.404	0.495	0.572	0.639	0.700	0.767	0.809
0.14	0.014	0.469	0.574	0.663	0.741	0.812	0.890	0.938
0.15	0.015	0.538	0.659	0.761	0.851	0.932	1.021	1.077
0.16	0.016	0.612	0.750	0.866	0.968	1.061	1.162	1.225
0.18	0.018	0.775	0.949	1.096	1.226	1.343	1.471	1.550
0.2	0.020	0.957	1.172	1.353	1.513	1.658	1.816	1.914
0.21	0.021	1.055	1.292	1.492	1.668	1.828	2.002	2.110
0.22	0.022	1.158	1.418	1.638	1.831	2.006	2.197	2.316
0.24	0.024	1.378	1.688	1.949	2.179	2.387	2.615	2.756
0.25	0.025	1.495	1.831	2.115	2.364	2.590	2.837	2.991
0.26	0.026	1.617	1.981	2.287	2.557	2.801	3.069	3.235
0.28	0.028	1.876	2.297	2.653	2.966	3.249	3.559	3.752
0.31	0.031	2.299	2.816	3.252	3.635	3.982	4.363	4.599
0.32	0.032	2.450	3.001	3.465	3.874	4.243	4.649	4.900
2	0.036	3.101	3.798	4.385	4.903	5.371	5.883	6.202
3	0.043	4.424	5.418	6.256	6.995	7.662	8.394	8.848
4	0.047	5.285	6.473	7.474	8.357	9.154	10.028	10.570
4.5	0.050	5.981	7.326	8.459	9.457	10.360	11.349	11.963
5	0.052	6.469	7.923	9.149	10.229	11.205	12.275	12.939
5.5	0.055	7.238	8.864	10.235	11.443	12.536	13.732	14.475
6	0.059	8.329	10.200	11.778	13.169	14.425	15.802	16.657
6.5	0.060	8.613	10.549	12.181	13.619	14.919	16.342	17.226
7	0.062	9.197	11.264	13.007	14.542	15.930	17.450	18.394
7.5	0.065	10.109	12.380	14.296	15.983	17.509	19.180	20.217
8	0.067	10.740	13.154	15.189	16.982	18.603	20.378	21.480
8.5	0.069	11.391	13.951	16.109	18.011	19.730	21.613	22.782
9	0.071	12.061	14.772	17.057	19.070	20.890	22.884	24.122
9.5	0.073	12.750	15.615	18.031	20.159	22.084	24.191	25.500
10	0.075	13.458	16.483	19.033	21.279	23.310	25.535	26.916
10.5	0.077	14.186	17.374	20.061	22.429	24.570	26.915	28.371
11	0.078	14.556	17.828	20.586	23.016	25.212	27.619	29.113
11.5	0.080	15.312	18.754	21.655	24.211	26.522	29.053	30.625
12	0.082	16.088	19.703	22.751	25.437	27.865	30.524	32.175
12.5	0.084	16.882	20.676	23.875	26.693	29.240	32.031	33.764
13	0.085	17.286	21.171	24.446	27.332	29.941	32.798	34.573
14	0.089	18.951	23.211	26.801	29.965	32.825	35.958	37.903
15	0.093	20.693	25.344	29.265	32.719	35.842	39.263	41.387
16	0.095	21.593	26.446	30.537	34.141	37.400	40.970	43.186
18	0.100	23.926	29.303	33.836	37.830	41.440	45.396	47.851
20	0.106	26.883	32.925	38.018	42.506	46.562	51.007	53.766
21	0.109	28.426	34.815	40.200	44.946	49.235	53.935	56.852
25	0.118	33.314	40.801	47.113	52.674	57.702	63.209	66.628
27	0.125	37.384	45.786	52.869	59.109	64.751	70.931	74.768
30	0.130	40.434	49.522	57.183	63.932	70.034	76.719	80.869
35	0.140	46.894	57.433	66.318	74.146	81.223	88.976	93.788
40	0.156	58.225	71.311	82.343	92.062	100.849	110.475	116.451
50	0.167	66.726	81.723	94.365	105.503	115.573	126.604	133.452
60	0.187	83.666	102.469	118.321	132.287	144.913	158.744	167.331
70	0.203	98.595	120.754	139.435	155.893	170.772	187.071	197.190
80	0.210	105.512	129.225	149.217	166.829	182.752	200.195	211.024
90	0.219	114.750	140.539	162.281	181.435	198.752	217.722	229.499
100	0.250	149.535	183.142	211.475	236.436	259.003	283.723	299.070

15K - TUNGSTEN NOZZLE FLOWS

Nozzle Number	Orifice Diam./In.	2,000 PSI	4,000 PSI	5,000 PSI	6,000 PSI	7,000 PSI	8,000 PSI	9,000 PSI	10,000 PSI	15,000 PSI	20,000 PSI	25,000 PSI	30,000 PSI
0.15	0.015	0.291	0.412	0.460	0.504	0.544	0.582	0.617	0.651	0.797	0.920	1.029	1.127
0.16	0.016	0.331	0.468	0.524	0.573	0.619	0.662	0.702	0.740	0.907	1.047	1.171	1.282
0.18	0.018	0.419	0.593	0.663	0.726	0.784	0.838	0.889	0.937	1.148	1.325	1.482	1.623
0.2	0.020	0.517	0.732	0.818	0.896	0.968	1.035	1.097	1.157	1.417	1.636	1.829	2.004
0.21	0.021	0.570	0.807	0.902	0.988	1.067	1.141	1.210	1.275	1.562	1.804	2.017	2.209
0.22	0.022	0.626	0.885	0.990	1.084	1.171	1.252	1.328	1.400	1.714	1.980	2.213	2.424
0.24	0.024	0.745	1.054	1.178	1.290	1.394	1.490	1.580	1.666	2.040	2.356	2.634	2.885
0.25	0.025	0.808	1.143	1.278	1.400	1.512	1.617	1.715	1.807	2.214	2.556	2.858	3.131
0.26	0.026	0.874	1.236	1.382	1.514	1.636	1.749	1.855	1.955	2.394	2.765	3.091	3.386
0.28	0.028	1.014	1.434	1.603	1.756	1.897	2.028	2.151	2.267	2.777	3.206	3.585	3.927
0.29	0.029	1.088	1.538	1.720	1.884	2.035	2.175	2.307	2.432	2.979	3.440	3.846	4.213
0.31	0.031	1.243	1.758	1.965	2.153	2.325	2.486	2.637	2.779	3.404	3.930	4.394	4.814
0.32	0.032	1.324	1.873	2.094	2.294	2.478	2.649	2.809	2.961	3.627	4.188	4.682	5.129
2	0.036	1.676	2.370	2.650	2.903	3.136	3.352	3.556	3.748	4.590	5.300	5.926	6.492
2._	0.039	1.967	2.782	3.110	3.407	3.680	3.934	4.173	4.399	5.387	6.221	6.955	7.619
2._	0.040	2.069	2.926	3.272	3.584	3.871	4.139	4.390	4.627	5.667	6.544	7.316	8.014
2._	0.041	2.174	3.075	3.438	3.766	4.067	4.348	4.612	4.861	5.954	6.875	7.687	8.420
3	0.043	2.391	3.382	3.781	4.142	4.474	4.783	5.073	5.347	6.549	7.562	8.455	9.262
4	0.047	2.857	4.040	4.517	4.948	5.345	5.714	6.061	6.388	7.824	9.035	10.101	11.065
4.5	0.050	3.233	4.573	5.112	5.600	6.049	6.467	6.859	7.230	8.855	10.225	11.432	12.523
4._	0.051	3.364	4.757	5.319	5.827	6.293	6.728	7.136	7.522	9.213	10.638	11.893	13.029
5	0.052	3.497	4.946	5.530	6.057	6.543	6.994	7.419	7.820	9.577	11.059	12.364	13.544
5.5	0.055	3.912	5.533	6.186	6.776	7.319	7.825	8.299	8.748	10.714	12.372	13.832	15.152
6	0.059	4.502	6.367	7.118	7.798	8.423	9.004	9.550	10.067	12.329	14.237	15.917	17.437
6.5	0.060	4.656	6.585	7.362	8.064	8.711	9.312	9.877	10.411	12.751	14.724	16.461	18.033
7	0.062	4.972	7.031	7.861	8.611	9.301	9.943	10.546	11.117	13.615	15.721	17.577	19.255
7.5	0.065	5.464	7.728	8.640	9.465	10.223	10.929	11.592	12.219	14.965	17.280	19.319	21.163
8	0.067	5.806	8.211	9.180	10.056	10.862	11.612	12.316	12.982	15.900	18.359	20.527	22.486
8.5	0.069	6.158	8.708	9.736	10.665	11.520	12.315	13.062	13.769	16.863	19.472	21.770	23.848
9	0.071	6.520	9.220	10.309	11.292	12.197	13.039	13.830	14.578	17.855	20.617	23.051	25.251
9.5	0.073	6.892	9.747	10.897	11.938	12.894	13.784	14.621	15.411	18.875	21.795	24.368	26.693
10	0.075	7.275	10.288	11.503	12.601	13.610	14.550	15.433	16.267	19.923	23.006	25.721	28.176
10.5	0.077	7.668	10.844	12.124	13.282	14.346	15.336	16.267	17.147	21.000	24.249	27.111	29.699
11	0.078	7.869	11.128	12.441	13.629	14.721	15.737	16.692	17.595	21.549	24.883	27.820	30.475
11.5	0.080	8.277	11.706	13.088	14.337	15.485	16.555	17.559	18.509	22.668	26.175	29.265	32.058
12	0.082	8.696	12.299	13.750	15.063	16.269	17.393	18.448	19.446	23.816	27.500	30.746	33.681
12.5	0.084	9.126	12.906	14.429	15.806	17.073	18.252	19.359	20.406	24.992	28.858	32.264	35.344
13	0.085	9.344	13.215	14.775	16.185	17.482	18.689	19.822	20.895	25.591	29.549	33.037	36.190
14	0.089	10.244	14.488	16.198	17.744	19.166	20.489	21.732	22.907	28.056	32.396	36.220	39.677
15	0.093	11.186	15.819	17.687	19.375	20.927	22.372	23.729	25.013	30.634	35.373	39.549	43.323
16	0.095	11.672	16.507	18.456	20.217	21.837	23.345	24.761	26.100	31.966	36.911	41.268	45.207
18	0.100	12.933	18.290	20.449	22.401	24.196	25.867	27.436	28.920	35.419	40.899	45.726	50.091
20	0.106	14.532	20.551	22.977	25.170	27.187	29.064	30.827	32.494	39.797	45.954	51.378	56.282
25	0.118	18.008	25.468	28.474	31.191	33.691	36.017	38.202	40.268	49.318	56.947	63.669	69.746
27	0.125	20.208	28.579	31.952	35.002	37.806	40.417	42.868	45.187	55.343	63.904	71.447	78.267
30	0.130	21.857	30.911	34.559	37.858	40.891	43.715	46.366	48.874	59.859	69.119	77.277	84.653
35	0.140	25.349	35.849	40.081	43.906	47.424	50.699	53.774	56.683	69.422	80.162	89.623	98.178
40	0.156	31.475	44.512	49.766	54.516	58.884	62.949	66.768	70.379	86.197	99.531	****	****
50	0.167	36.070	51.010	57.031	62.475	67.480	72.140	76.516	80.654	98.781	****	****	****
60	0.187	45.227	63.960	71.509	78.335	84.611	90.453	80.654	****	****	****	****	****
70	0.203	53.297	75.373	84.270	92.313	99.710	95.940	****	****	****	****	****	****
80	0.210	57.036	80.661	90.182	98.789	****	****	****	****	****	****	****	****
90	0.219	62.030	87.723	98.077	****	****	****	****	****	****	****	****	****
100	0.250	80.833	****	****	****	****	****	****	****	****	****	****	****

15K Reducer Bushings

Made specifically for water blasting service, these high quality reducer bushings are made from heavy duty stainless steel because of its reliability and durability.

Part #	Description	PSI/Bar
20-010-001	1/8" NPT (M) x 1/16" NPT (F)	15K/1034
20-010-002	1/4" NPT (M) x 1/16" NPT (F)	15K/1034
20-010-003	1/4" NPT (M) x 1/8" NPT (F)	15K/1034
20-010-004	3/8" NPT (M) x 1/16" NPT (F)	15K/1034
20-010-005	3/8" NPT (M) x 1/8" NPT (F)	15K/1034
20-010-006	3/8" NPT (M) x 1/4" NPT (F)	15K/1034
20-010-007	1/2" NPT (M) x 1/16" NPT (F)	15K/1034
20-010-008	1/2" NPT (M) x 1/8" NPT (F)	15K/1034
20-010-009	1/2" NPT (M) x 1/4" NPT (F)	15K/1034
20-010-010	1/2" NPT (M) x 3/8" NPT (F)	15K/1034
20-010-011	3/4" NPT (M) x 1/4" NPT (F)	15K/1034
20-010-012	3/4" NPT (M) x 3/8" NPT (F)	15K/1034
20-010-013	3/4" NPT (M) x 1/2" NPT (F)	15K/1034
20-010-014	1" NPT (M) x 1/2" NPT (F)	12K/827
20-010-015	1" NPT (M) x 3/4" NPT (F)	12K/827
20-010-016	1" NPT (M) x 3/8" NPT (F)	12K/827
20-010-017	1-1/4" NPT (M) x 1" NPT (F)	10K/689

12-15K Swage Adaptors

Part #	Description	PSI/Bar
20-009-001	1/8" NPT (F) x 1/16" NPT (M)	15K/1034
20-009-002	1/2" NPT (F) x 1/4" NPT (M)	15K/1034
20-009-003	1/2" NPT (F) x 3/8" NPT (M)	15K/1034
20-009-004	3/4" NPT (F) x 1/2" NPT (M)	15K/1034
20-009-005	1" NPT (F) x 1/2" NPT (M)	12K/827
20-009-006	1" NPT (F) x 3/4" NPT (M)	12K/827
20-001-009	1/4" NPTF x 1/8" NPTM	15K/1034

12-15K Heavy Duty Couplings

Part #	Description	PSI/Bar
20-005-001	1/4" NPT x 1/8" NPT	15K/1034
20-005-002	1/4" NPT x 1/4" NPT	15K/1034
20-005-003	3/8" NPT x 1/8" NPT	15K/1034
20-005-004	3/8" NPT x 1/4" NPT	15K/1034
20-005-005	3/8" NPT x 3/8" NPT	15K/1034
20-005-006	1/2" NPT x 1/16" NPT	15K/1034
20-005-007	1/2" NPT x 1/8" NPT	15K/1034
20-005-008	1/2" NPT x 1/4" NPT	15K/1034
20-005-009	1/2" NPT x 3/8" NPT	15K/1034
20-005-010	1/2" NPT x 1/2" NPT	15K/1034
20-005-011	3/4" NPT x 1/4" NPT	15K/1034
20-005-012	3/4" NPT x 1/2" NPT	15K/1034
20-005-013	3/4" NPT x 3/4" NPT	12K/827
20-005-014	1" NPT x 1/2" NPT	12K/827
20-005-015	1" NPT x 3/4" NPT	12K/827
20-005-016	1" NPT x 1" NPT	12K/827
20-005-017	1/8" NPT x 1/8" NPT	15K/1034
20-005-018	1-1/4" NPT x 1-1/4" NPT	7.5K/517
20-005-019	1-1/4" NPT x 1" NPT	7.5K/517
20-005-020	3/4" NPT x 3/8" NPT	15K/1034

10-15K Socket Head Plugs

Part #	Description	PSI/Bar
15-218-000	1/16" NPT	15K/1034
15-118-000	1/8" NPT	15K/1034
15-018-000	1/4" NPT	15K/1034
15-037-000	3/8" NPT	15K/1034
15-050-000	1/2" NPT	15K/1034
15-075-000	3/4" NPT	10K/689

MP-Male to NPT Reducer Bushings

Part #	Description	PSI/Bar
20-010-020	9/16" MP (M) x 1/8" NPT (F)	15K/1034
20-010-021	9/16" MP (M) x 1/4" NPT (F)	15K/1034
20-010-022	9/16" MP (M) x 3/8" NPT (F)	15K/1034
20-010-023	9/16" MP (M) x 1/2" NPT (F)	15K/1034
20-010-024	3/4" MP (M) x 3/8" NPT (F)	15K/1034
20-010-025	3/4" MP (M) x 1/2" NPT (F)	15K/1034
20-010-026	3/4" MP (M) x 3/4" NPT (F)	15K/1034
20-010-027	1" MP (M) x 1/2" NPT (F)	15K/1034
20-010-028	1" MP (M) x 3/4" NPT (F)	15K/1034
20-010-029	1" MP (M) x 1" NPT (F)	12K/827

Metric/BSP to NPT Adaptors

APS offers NPT, metric and BSP fittings for all of your connect needs. If what you need is not listed, please call and ask.

Part #	Description	PSI/Bar
20-026-001	1/2" NPT (M) x M24 x 1.5 (M)	16K/1100
20-026-002	1/2" NPT (F) x M24 x 1.5 (M)	16K/1100
20-026-003	1/2" NPT (M) x 1/2" BSP (M)	15K/1034
20-026-004	1/2" NPT (F) x 1/2" BSP (M)	16K/1100
20-026-005	M24-1.5 x M24-1.5 SS	16K/1100
20-026-006	M24 x 1.5 (M) x 3/4" NPT (M) SS	16K/1100
20-026-007	M36 x 2.0 (M) x 3/4" NPT (M) SS	15K/1034
20-026-008	M36 x 2.0 x M36 x 2.0 SS	20K/1378
20-026-009	1/2" NPT (M) x M22 x 1.5 (M)	15K/1034
20-026-010	1/2" BSPP (F) x 1/2" BSPP (F) with O-Rings	15K/1034
20-026-011	M24 x 1.5 (M) x 1/2" BSPP with O-Ring	15K/1034

Copper Coated Stainless Steel

10-15K Hex Head Plugs

Manufactured by **APS** specifically for water blasting service, these fittings are made from heavy duty stainless steel because of its reliability and durability.

Part #	Description	PSI/Bar
20-018-001	1/16" NPT	15K/1034
20-018-002	1/8" NPT	15K/1034
20-018-003	1/4" NPT	15K/1034
20-018-004	3/8" NPT	15K/1034
20-018-005	1/2" NPT	15K/1034
20-018-006	3/4" NPT	12K/827
20-018-007	1" NPT	10K/689
20-018-008	1-1/4" NPT	10K/689

10-15K Slimline Couplings

The **APS** slimline couplings are available in 10,000 and 15,000 PSI ratings. Check the different O.D.s for your tube cleaning application.

Part #	Description	Dimensions	PSI/Bar
20-001-001	1/16" x 1/16" NPT	3/8" OD x 0.906" L	10K/689
20-001-002	1/8" x 1/8" NPT	15/32" OD x 0.905" L	10K/689
20-001-003	1/4" x 1/8" NPT	5/8" OD x 0.905" L	10K/689
20-001-004	1/4" x 1/4" NPT	5/8" OD x 1.312" L	10K/689
20-001-005	3/8" x 3/8" NPT	7/8" OD x 1.437" L	15K/1034
20-001-006	1/2" x 1/2" NPT	1-1/8" OD x 1.687" L	10K/689
20-001-007	3/4" x 3/4" NPT	1-1/2" OD x 2" L	10K/689
20-001-008	1" x 1" NPT	2" OD x 2.125" L	10K/689
20-001-011	1/2" x 3/8" NPT	1-1/4" OD x 1.125" L	10K/689
20-001-031	3/8" x 3/8" NPT	0.813" OD x 1.437" L	10K/689
20-001-101	1/16" x 1/16" NPT	0.406" OD x 0.875" L	15K/1034
20-001-102	1/8" x 1/8" NPT	1/2" OD x 0.875" L	15K/1034
20-001-104	1/4" x 1/4" NPT	3/4" OD x 1.187" L	15K/1034
20-001-106	1/2" x 1/2" NPT	1.187" OD x 1.687" L	15K/1034

15K MP x NPT Slimline Couplings

The **APS** slimline couplings rated for 15,000 PSI are mainly used on rotary lance machines when downgrading from 20K and 40K to 15K applications.

Part #	Description	Dimensions
20-027-001	9/16" MP LH x 1/16" NPT	11/16" OD x 2.250" L
20-027-002	9/16" MP LH x 1/8" NPT	11/16" OD x 2.250" L
20-027-003	9/16" MP LH x 1/4" NPT	3/4" OD x 2.250" L
20-027-004	9/16" MP RH x 1/16" NPT	11/16" OD x 2.250" L
20-027-005	9/16" MP RH x 1/8" NPT	11/16" OD x 2.250" L
20-027-006	9/16" MP RH x 1/4" NPT	3/4" OD x 2.250" L
20-027-007	9/16" HP LH x 1/16" NPT	11/16" OD x 2.250" L
20-027-008	9/16" HP LH x 1/8" NPT	11/16" OD x 2.250" L
20-027-009	9/16" HP LH x 1/4" NPT	3/4" OD x 2.250" L
20-027-010	9/16" HP RH x 1/16" NPT	11/16" OD x 2.250" L
20-027-011	9/16" HP RH x 1/8" NPT	11/16" OD x 2.250" L
20-027-012	9/16" HP RH x 1/4" NPT	3/4" OD x 2.250" L
20-027-013	9/16" MP LH x 3/8" NPT	7/8" OD x 2.250" L

15K BSPP Couplings

The **APS** couplings rated for 15,000 PSI are mainly used on rotary lance machines when downgrading from 20K and 40K to 15K applications.

Part #	Description	PSI/Bar
20-026-012	1/8" BSPP X 1/8" BSPP COPPER COATED	15K/1034
20-026-013	1/4" BSPP X 1/4" BSPP COPPER COATED	15K/1000
20-026-041	3/8" NPT(F) X 1/2" BSP(F) SS	15K/1034
20-026-046	1/4" BSPP (F) X 3/8" MP (F) (9/16"-18)	15K/1034
20-026-057	1/2" BSPP X 1/2" BSPP	15K/1034
20-026-061	HEAVY DUTY, 3/8" NPT(F) X 3/8" BSP(F) SS	15K/1034
20-026-064	1/4" BSPP (F) X 1/4" HP (F) SS	15K/1034
20-026-069	1/4" BSPP (F) X 1/4" HP (F) SS	25K
20-026-070	3/8" BSP(F) X 3/8" BSP(F) SS	15K/1034
20-026-071	3/8" NPT(F) X 3/8" BSP(F) SS (.875 DIA.)	15K/1034

12-15K Hex Nipples

Made in both straight and reducing varieties, specifically for water blasting service, these hex nipples are made from heavy duty stainless steel because of its reliability and durability.

Part #	Description	PSI/Bar
20-011-001	1/16" x 1/16" NPT (M)	15K/1034
20-011-002	1/8" x 1/8" NPT (M)	15K/1034
20-011-003	1/8" x 1/16" NPT (M)	15K/1034
20-011-004	1/4" x 1/4" NPT (M)	15K/1034
20-011-005	1/4" x 1/8" NPT (M)	15K/1034
20-011-006	3/8" x 3/8" NPT (M)	15K/1034
20-011-007	3/8" x 1/4" NPT (M)	15K/1034
20-011-008	1/2" x 1/2" NPT (M)	15K/1034
20-011-009	1/2" x 1/4" NPT (M)	15K/1034
20-011-010	1/2" x 3/8" NPT (M)	15K/1034
20-011-011	3/4" x 3/4" NPT (M)	15K/1034
20-011-012	3/4" x 1/2" NPT (M)	15K/1034
20-011-013	1" x 1" NPT (M)	12K/827
20-011-014	1" x 1/2" NPT (M)	12K/827
20-011-015	1" x 3/4" NPT (M)	12K/827
20-011-016	3/4" x 3/8" NPT (M)	15K/1034

If you don't see what you are looking for or just have a question, call toll free in North America 1 (877) 290-4277 or (281) 290-9950.

15K UNF Lance Connector

The **APS** slimline connector rated for 15,000 PSI are mainly used on rotary lance machines when downgrading from 20K and 40K to 15K applications.

Part #	Description
20-023-001	12-28 UNF x 12-28 UNF
20-023-002	1/4-28 UNF(M) x 1/4-28(M) UNF
20-023-003	5/16-24 UNF(M) x 5/16-24(M) UNF
20-023-004	3/8-16 UNC x 3/8-16 UNC
20-023-005	1/2-20 UNF x 1/2-20 UNF
20-023-006	12-28 UNF x 1/8" NPTM
20-023-007	12-28 UNF x 1/4"NPTM
20-023-008	5/16"-24 UNF x 1/8" NPTM
20-023-009	5/16"-24 UNF X 1/16"NPTM
20-023-010	5/8"-18 UNF x 5/8"-18

12-15K One-Piece & Torpedo Adaptors MP (M) x NPT (M)

Part #	Description	PSI/Bar
20-020-001	Adaptor 9/16" MP (M) x 1/2" NPT (M)	15K/1034
20-020-002	Adaptor 3/4" MP (M) x 1/2" NPT (M)	15K/1034
20-020-003	Adaptor 3/4" MP (M) x 3/4" NPT (M)	15K/1034
20-020-004	Adaptor 3/4" MP (M) x 1" NPT (M)	12K/827
20-020-005	Adaptor 1" MP (M) x 1/2" NPT (M)	15K/1034
20-020-006	Adaptor 1" MP (M) x 3/4" NPT (M)	15K/1034
20-020-007	Adaptor 1" MP (M) x 1" NPT (M)	10K/689
20-020-008	Torpedo 1" MP (M) x 1/2" NPT (M)	15K/1034
20-020-009	Torpedo 1" MP (M) x 3/4" NPT (M)	15K/1034
20-020-010	Torpedo 1" MP (M) x 1" NPT (M)	12K/827

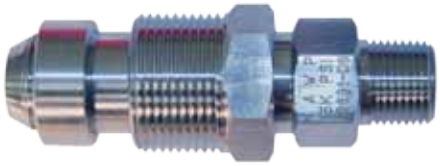

10-15K Type M x NPT (M) Adaptors

Part #	Description
20-019-001	5MM (9/16"-18) TYPE M X 1/2" NPT(M) 15K WP SS
20-019-002	8MM (3/4"-16) TYPE M X 1/2" NPT(M) 15K WP SS
20-019-003	13MM (1"-12) TYPE M X 1/2" NPT(M) 15K WP SS
20-019-004	13MM (1"-12) TYPE M X 3/4" NPT(M) 15K WP SS
20-019-005	13MM (1"-12) TYPE M X 1" NPT(M) 12K WP EA
20-019-006	20MM (1-5/16"-12) TYPE M X 1/2" NPT(M) 15K WP
20-019-007	20MM (1-5/16"-12) TYPE M X 3/4" NPT(M) 15K WP
20-019-008	20MM (1-5/16"-12) TYPE M X 1" NPT(M) 12K MAWP
20-019-009	5MM (9/16"-18) TYPE M X 1/4" NPT(M) 15K WP
20-019-010	5MM (9/16"-18) TYPE M X 3/8" NPT(M) 15K WP
20-019-011	13MM (1"-12) TYPE M X 3/8" NPT(M) 15K WP
20-019-015	8MM (3/4" - 16) TYPE M X 3/4" NPT(M) 15K WP SS
20-019-019	5MM (9/16"-18) TYPE M X 3/4" NPT(M) 15K WP
20-019-020	8MM (3/4-16) TYPE M X 1/4" NPT(M) 15K WP
20-019-021	8MM (3/4"-16) TYPE M X 3/8" NPT(M) 15K WP SS
20-019-025	5MM (9/16"-18) TYPE M X 1" NPT(M) 12K WP SS
20-019-026	8MM (3/4"-16) TYPE M X 1" NPT(M) 12K WP
20-019-027	20MM (1-5/16"-12) TYPE M X 3/8" NPT(M) 15K MAWP SS

If you don't see what you are looking for or just have a question, call toll free in North America 1 (877) 290-4277 or (281) 290-9950.

15K Adaptors M33 (M) x NPT (M)

Part #	Description	PSI/Bar
20-026-014	M33 X 2 (M) X 1-5/16"-12 (F) SS	20K/1378
20-026-015	M33 X 2 (M) X 20MM TYPE M (1-5/16"-12) SS	20K/1378
20-026-016	M33 X 2 (M) X 13MM TYPE M (1"-12) SS	20K/1378
20-026-019	3/8" NPT(F) X M24 X 1.5 (M)	15K/1100
20-026-020	1/4" NPT(F) X M24 X 1.5 (M)	15K/1100
20-026-031	M24 X 1.5 (M) X M24 X 1.5 (M) SS	23K/1600
20-026-032	M33 X 2 (M) X 1/2" NPT (F) SS	15K/1100
20-026-033	M33 X 2 (M) X 3/4" NPT (F) SS	15K/1100
20-026-034	1/2" BSP(M) X 1/2" BSP(M) SS	15K/1100
20-026-035	3/8" BSP(M) X 3/8" BSP(M)	15K/1100
20-026-036	M33 X 2 (M) 13MM (1"-12) SS TYPE M	15K/1100
20-026-037	M33 X 2 (M) X 20MM (1-5/16"-12) SS TYPE M	15K/1100
20-026-038	1/2" BSP(M) X M24 X 1.5 (M)	15K/1100
20-026-039	M36 X 2 (M) X 1" NPT (M) SS	827 BAR
20-026-040	1/4" BSPP (M) X 3/8" NPT (M)	15K/1100
20-026-042	M36 X 2 (M) X 1/2" NPT (M) SS	15K/1034
20-026-049	M22 X 1.5 (M) X 3/8" NPT (M)	15K/1100
20-026-066	1/2" NPT(M) X 3/8 BSPP (M) MAWP SS (60° FEMALE CONE)	15K/1100
20-026-067	3/8" NPT(M) X 3/8 BSPP (M) MAWP SS (60° FEMALE CONE)	15K/1100

Part #	Description	PSI/Bar
21-007-039	M42 X 2 MALE W/24° FLARE X 3/8" HPM (3/4"-16) SS	17,4K/
21-007-040	M36 X 2 MALE W/24° FLARE X 3/8" HPM (3/4"-16) SS MAWP	20,300
21-007-041	M42 X 2 - M42 X 2 SS 17,4K	17,4K
21-007-042	1" MP MALE X M36 X 2 TYPE M MALE	20K/1380
21-007-056	3/4" MP M X M36 X 2 SS	1379 BAR
21-007-058	1" MP M X 5MM (9/16"-18) TYPE M MALE	20K/1380
21-007-059	3/4" MP MALE X M24 X 1.5 (M) W/24° INC. SEAT	15K/1379
21-007-060	9/16" MP M X M36 X 2 SS (1379 BAR)	20,300/ 1379 BAR
21-007-061	M36 X 2 X M24 X 1.5 SS	24K/1650 BAR
21-007-064	M42 X 2 - M42 X 2 SS 17,4K	17,4K
21-007-065	1" MP MALE X M36 X 2 TYPE M MALE	20K/1380
21-007-066	3/8" HP (M) X G-1/4 BSPP (M) W/24° (F) CONE	20K/1380
21-007-067	9/16" HP (M) X 3/8" MP (M) 20K MAWP SS	20K/1380
21-007-068	3/8" MP (M) X G-1/4 BSPP (M) W/24° (F) CONE SS	
21-007-069	5MM TYPE M (9/16"-18) X G-1/4 BSPP (M) W/24° (F) CONE SS	
21-007-071	1" MP MALE X M24 X 1.5 TYPE M MALE	20K/1380
21-007-074	9/16" MP (M) X G-1/4 BSPP (M) W/24° (F) CONE SS	20K/1380
21-007-077	13MM TYPE M X M36 X 2 (MUST BE USED WITH BRASS OR COPPER WASHER)	1379 BAR

15K Bushings

Part #	Description	PSI/Bar
20-026-043	BUSHING, 3/8" BSP(M) X 1/16" NPT(F) SLIMLINE	15K/1100
20-026-044	BUSHING, 3/8" BSP(M) X 1/8" NPT(F) SLIMLINE	15K/1100
20-026-045	BUSHING, 3/8" BSP(M) X 1/4" NPT(F) SLIMLINE	15K/1100
20-026-053	REDUCER BUSHING, 3/8" BSP(M) X 1/16" NPT(F) SS HEX	15K/1100
20-026-054	REDUCER BUSHING, 3/8" BSP(M) X 1/8" NPT(F) SS HEX	15K/1100
20-026-055	REDUCER BUSHING, 3/8" BSP(M) X 1/4" NPT(F) SS HEX	15K/1100
20-026-068	REDUCER BUSHING, 3/8" NPT(M) X 1/4" BSP(F)	15K/1100
21-007-075	BUSHING, 1/4" NPT (F) X M24 X 1.5 (M)	15K /1,034
21-007-156	REDUCER BUISHING, 3/4" MP (F) X M36 X 2 SS W/O GLAND NUT & COLLAR	/1,379

10-15K Screw-Type & Kemper Hammer Unions

APS offers both screw-type and Kemper hammer unions with large screw threads and a hub that can be "knocked off" with a hammer for quick disconnection of hoses. Connections are available to suit most hoses. NPT connections feature heavy duty O-rings.

Part #	Screw-Type Unions	PSI/Bar
20-050-003	1" NPT (AW)	10K/689
20-050-002	3/4" NPT (AW)	10K/689
20-050-001	1/2" NPT (AW)	10K/689
20-050-004	1" O-Ring	10K/689
20-050-005	3/4" O-Ring	10K/689
20-050-006	1/2" O-Ring	10K/689
Part #	**Kemper Unions**	**PSI/Bar**
20-050-100	1" Kemper Assy. (Complete)	10K/689
20-050-101	1" Kemper Union Seal	10K/689

Wafer Tees

The **APS** wafer tees and elbows are made from durable, high strength stainless steel specifically for water jetting service. Wafer crosses are also available.

Part #	Description	PSI/Bar
20-004-001	1/8" x 1/8" x 1/8" NPT	15K/1034
20-004-002	1/4" x 1/4" x 1/4" NPT	15K/1034
20-004-003	3/8" x 3/8" x 3/8" NPT	15K/1034
20-004-004	1/2" x 1/2" x 1/2" NPT	15K/1034
20-004-005	3/4" x 3/4" x 3/4" NPT	15K/1034
20-004-006	1" x 1" x 1" NPT	12K/827

45° Wafer Elbows

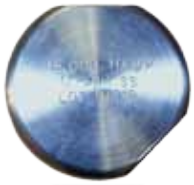

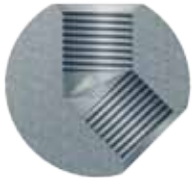

Part #	Description	PSI/Bar
20-004-013	1/8" x 1/8" NPT	15K/1034
20-004-014	1/4" x 1/4" NPT	15K/1034
20-004-015	3/8" x 3/8" NPT	15K/1034
20-004-016	1/2" x 1/2" NPT	15K/1034
20-004-017	3/4" x 3/4" NPT	15K/1034
20-004-018	1" x 1" NPT	12K/827

Do you need Lubricants, Sealants or Tape? Find it on page 27

10-15K Quick Disconnect Couplings

APS designed its quick-disconnect hose couplings with all the best features seen in the market. They are made from heat-treated heavy duty stainless steel for high durability in water blasting service. Sizes available to suit most hoses. All feature easy-grip texturing for ease of use. **APS** now offers Aeroquip™ quick-disconnect couplings as well.

Part #	Connection - Screw-Type	PSI/Bar
20-003-005	3/8" x 3/8" NPT Screw-Type	15K/1034
20-003-008	1/2" x 1/2" NPT Screw-Type	15K/1034
20-003-012	3/4" x 3/4" NPT Screw-Type	15K/1034
20-003-016	1" x 1" NPT Screw-Type	10K/689
20-003-001	3/8" Female Half Screw-Type	15K/1034
20-003-007	3/8" Male Half Screw-Type	15K/1034
20-003-002	1/2" Female Half Screw-Type	15K/1034
20-003-010	1/2" Male Half Screw-Type	15K/1034
20-003-003	3/4" Female Half Screw-Type	12K/827
20-003-014	3/4" Male Half Screw-Type	12K/827
20-003-004	1" Female Half Screw-Type	10K/689
20-003-018	1" Male Half Screw-Type	10K/689
30-001-018	1/2" & 3/8" O-Rings	15K/1034
30-003-018	1/2" & 3/8" BU-Rings	15K/1034
30-001-122	3/4" O-Rings	12K/827
30-003-122	3/4" BU-Rings	12K/827
30-001-218	1" O-Rings	10K/689
30-003-218	1" BU-Rings	10K/689

Part #	Connection - Aeroquip	PSI/Bar
20-003-030	3/8" NPT Aeroquip	10K/689
20-003-033	1/2" NPT Aeroquip	10K/689
20-003-031	3/8" Male Half, Aeroquip	10K/689
20-003-032	3/8" Female Half, Aeroquip	10K/689
20-003-034	1/2" Male Half, Aeroquip	10K/689
20-003-035	1/2" Female Half, Aeroquip	10K/689
20-003-034	1/2" Male Half, Aeroquip	10K/689
20-003-035	1/2" Female Half, Aeroquip	10K/689
30-001-209	O-Ring, 2-209 BUNA-N 90 DURO (F/ Aeroquip QD coupling)	
30-003-209	Back-up ring, 8-209 BUNA-N 90 DURO (F/Aeroquip QD coupling)	

90° Wafer Elbows

Part #	Description	PSI/Bar
20-004-007	1/8" x 1/8" NPT	15K/1034
20-004-008	1/4" x 1/4" NPT	15K/1034
20-004-009	3/8" x 3/8" NPT	15K/1034
20-004-010	1/2" x 1/2" NPT	15K/1034
20-004-011	3/4" x 3/4" NPT	15K/1034
20-004-012	1" x 1" NPT	12K/827

90° Wafer Wyes

Part #	Description	PSI/Bar
20-004-025	1/8" NPT	15K/1034
20-004-026	1/4" NPT	15K/1034
20-004-027	3/8" NPT	15K/1034
20-004-028	1/2" NPT	15K/1034
20-004-029	3/4" NPT	15K/1034
20-004-030	1" NPT	12K/827

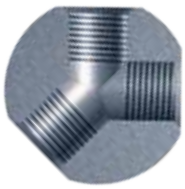

Wafer Crosses

The **APS** wafer tees & elbows are made from durable, high strength stainless steel specifically for water jetting service. Wafer crosses are also available.

Part #	Description	PSI/Bar
20-004-019	1/8" NPT	15K/1034
20-004-020	1/4" NPT	15K/1034
20-004-021	3/8" NPT	15K/1034

Part #	Description	PSI/Bar
20-004-022	1/2" NPT	15K/1034
20-004-023	3/4" NPT	15K/1034
20-004-024	1" NPT	12K/827

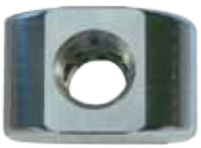

15K Flex Lance Stingers/Pipe Nipples

Advanced Pressure Systems proudly offers a growing line of quality flex lance stingers for every pressure and application. Stingers and pipe nipples are offered in 304 stainless steel. When ordering, please specify length and thread size. Additional lengths available upon request.

Part #	Stinger Thread	Length, In.	PSI/Bar
20-006-012	1/16" NPT	12"	15K/1034
20-006-018	1/16" NPT	18"	15K/1034
20-006-024	1/16" NPT	24"	15K/1034
20-006-036	1/16" NPT	36" (3 Ft.)	15K/1034
20-006-048	1/16" NPT	48" (4 Ft.)	15K/1034
20-007-012	1/8" NPT	12"	15K/1034
20-007-018	1/8" NPT	18"	15K/1034
20-007-024	1/8" NPT	24"	15K/1034
20-007-036	1/8" NPT	36" (3 Ft.)	15K/1034
20-007-048	1/8" NPT	48" (4 Ft.)	15K/1034
20-008-012	1/4" NPT	12"	15K/1034
20-008-018	1/4" NPT	18"	15K/1034

Part #	Stinger Thread	Length, In.	PSI/Bar
20-008-024	1/4" NPT	24"	15K/1034
20-008-036	1/4" NPT	36" (3 Ft.)	15K/1034
20-008-048	1/4" NPT	48" (4 Ft.)	15K/1034
20-012-012	3/8" NPT	12"	15K/1034
20-012-018	3/8" NPT	18"	15K/1034
20-012-024	3/8" NPT	24"	15K/1034
20-012-036	3/8" NPT	36" (3 Ft.)	15K/1034
20-012-048	3/8" NPT	48" (4 Ft.)	15K/1034
20-013-012	1/2" NPT	12"	15K/1034
20-013-018	1/2" NPT	18"	15K/1034
20-013-024	1/2" NPT	24"	15K/1034
20-013-036	1/2" NPT	36" (3 Ft.)	15K/1034

Part #	Stinger Thread	Length, In.	PSI/Bar
20-013-048	1/2" NPT	48" (4 Ft.)	15K/1034
20-014-012	3/4" NPT	12"	10K/689
20-014-018	3/4" NPT	18"	10K/689
20-014-024	3/4" NPT	24"	10K/689
20-014-036	3/4" NPT	36" (3 Ft.)	10K/689
20-014-048	3/4" NPT	48" (4 Ft.)	10K/689
20-015-012	1" NPT	12"	10K/689
20-015-018	1" NPT	18"	10K/689
20-015-024	1" NPT	24"	10K/689
20-015-036	1" NPT	36" (3 Ft.)	10K/689
20-015-048	1" NPT	48" (4 Ft.)	10K/689

STAINLESS STEEL AND CARBON STEEL RIGID LANCE, STINGERS & PIPE NIPPLES

Part #	Description	PSI/Bar
20-107-010	NIPPLE, 1/8" -28 BSPP X 10" SS	15K/1,034 BAR
20-107-020	NIPPLE, 1/8" -28 BSPP X 20" SS	15K/1,034 BAR
20-107-048	NIPPLE, 1/8" -28 BSPP X 48" SS	15K/1,034 BAR
20-108-010	NIPPLE, 1/4" -19 BSPP X 10" SS	15K/1,034 BAR
20-108-020	NIPPLE, 1/4" -19 BSPP X 20" SS	15K/1,034 BAR
20-108-040	NIPPLE, 1/4" -19 BSPP X 40" SS	15K/1,034 BAR
20-108-048	NIPPLE, 1/4" -19 BSPP X 48" SS	15K/1,034 BAR
20-113-024	NIPPLE, 1/2" BSP X 24" SS	15K/1,034 BAR
20-113-036	NIPPLE, 1/2" BSP X 36" SS	15K/1,034 BAR
20-113-048	NIPPLE, 1/2" BSP X 48" SS	15K/1,034 BAR
20-113-060	NIPPLE, 1/2" BSP X 60" (5') SS 15K	15K/1,034 BAR
20-117-010	NIPPLE, 1/8" -28 BSPP X 5/16"-24 UNF(F) X 10" SS	15K/1,034 BAR
20-118-010	NIPPLE, 1/8"-28 BSPP X 1/8" NPTM X 10" SS	15K/1,034 BAR
20-119-012	NIPPLE, 3/8" MPLH X 5/16"-24 UNF(F) X 12" SS	15K/1,034 BAR
20-212-048	NIPPLE, 3/8" -19 BSPP X 48" SS W/FLATS	15K/1,034 BAR
20-213-048	NIPPLE, 1/2" BSP X 1/2" NPT X 48" SS	15K/1,034 BAR

15K Rigid Lances

Advanced Pressure Systems proudly offers a growing line of quality 304 SS 1/8 hard rigid lances for every pressure and application. Female machine screw threads are available on all NPT sizes. When ordering, please specify length and thread size. Up to 40-foot lengths available.

EXAMPLE:
50-000-025
is 1/16" rigid lance x 25' overall length.

Part #	Connection	I.D. & O.D.	PSI/Bar
50-000-XXX	1/16" NPT	.312 OD x .182 ID	15K/1034
50-001-XXX	1/8" NPT	.406 OD x .220 ID	15K/1034
50-002-XXX	1/4" NPT	.540 OD x .302 ID	15K/1034
50-004-XXX	3/8" NPT	.675 OD x .390 ID	15K/1034
50-006-XXX	1/2" NPT	.840 OD x .490 ID	15K/1034
50-008-000	1" NPT	1.315 O.D. X .815 I.D.	15K/1034

10-15K Seamless 4130 Carbon Steel Rigid Lances

Advanced Pressure Systems proudly offers a growing line of quality 4130 carbon steel aircraft quality seamless rigid lances for every pressure and application. Female machine screw threads are available on all NPT sizes. When ordering, please specify length and thread size. Up to 45-foot lengths available.

EXAMPLE:
45-000-025
is 1/16" rigid lance x 25' overall length.

Part #	Connection	I.D. & O.D.	PSI/Bar
45-000-XXX	1/16" NPT	.312 OD x .182 ID	15K/1034
45-001-XXX	1/8" NPT	.405 OD x .215 ID	15K/1034
45-002-XXX	1/4" NPT	.540 OD x .302 ID	15K/1034

15K Rigid Lance Holder

The threaded end of a rigid lance where it connects directly to a manifold is its weakest point. A break at this threaded connection renders an otherwise good lance unusable.

Part #	15K Lance Holders Description	PSI/Bar
20-002-001	Lance Holder Assy. 1/2" NPT (M) x 1/16" NPT (F)	15K/1034
20-002-002	Lance Holder Assy. 1/2" NPT (M) x 1/8" NPT (F)	15K/1034
20-002-003	Lance Holder Assy. 1/2" NPT (M) x 1/4" NPT (F)	15K/1034

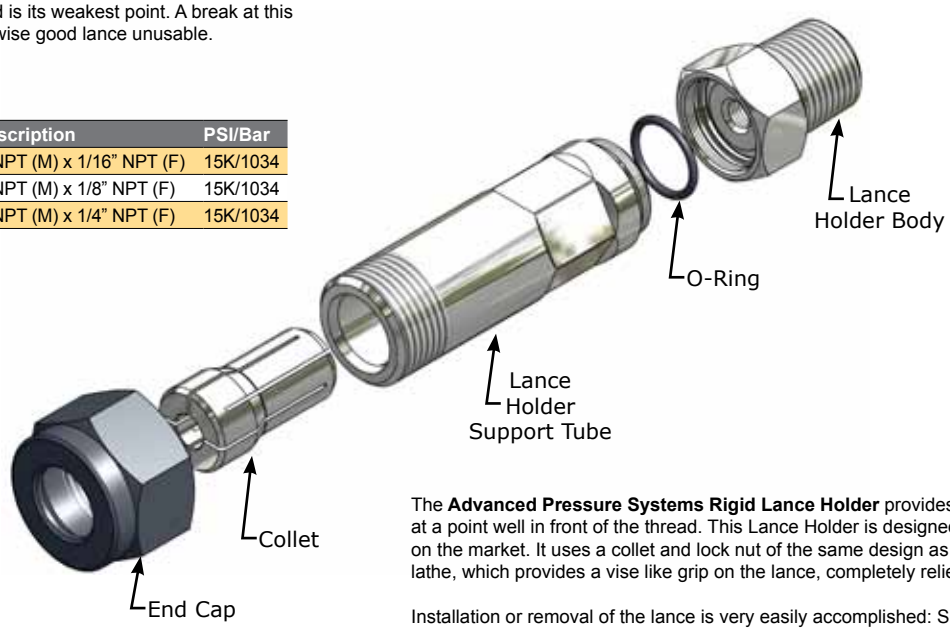

The **Advanced Pressure Systems Rigid Lance Holder** provides full support to the lance at a point well in front of the thread. This Lance Holder is designed to be the best available on the market. It uses a collet and lock nut of the same design as used for a machine shop lathe, which provides a vise like grip on the lance, completely relieving stress on the thread.

Installation or removal of the lance is very easily accomplished: Simply slide the End Cap, Collet and Lance Holder Support Tube onto the lance in that order and then screw the lance into the Lance Holder body. The Lance Holder Tube is then screwed into the Body and then the Collet is secured into the Lance Holder Tube by the End Cap. The lance will then be fully supported.

15K Dual Lance Manifolds

Advanced Pressure Systems offers a compact dual lance manifold so that you may run two rigid lances from a single control valve correctly. When ordering, please specify inlet and outlet sizes.

Part #	Connection	PSI/Bar
20-025-001	1/2" NPT (F) with 2 - 1/16" NPT (F) Outlets	15K/1034
20-025-002	1/2" NPT (F) with 2 - 1/8" NPT (F) Outlets	15K/1034
20-025-003	1/2" NPT (F) with 2 - 1/4" NPT (F) Outlets	15K/1034
20-025-004	1/2" NPT (F) with 2 - 1/2" NPT (F) Outlets	15K/1034

Operate Two Lances at the SameTime!

Articulated Flex Lance Safety Stop For Tube Sheet Mounting

This takes the Hand Held "Flex Lance Safety Grip" to the next level. This versatile lance stop/anti-withdrawal device attaches easily to the tube sheet for safer pipe cleaning operations. It features ready adaptability to vertical or horizontal applications and its wide range of expansion accommodates any size of tube sheet. Construction is galvanized steel with aluminum handles and includes a Lexan® splash guard.

The stops for six sizes of lances are provided by a quick-change insert, which is built into the design. This eliminates the problem of lost lance stops and makes changing to a different lance diameter quick and easy.

Part #	Description
36-015-089	Complete Chicken Wing

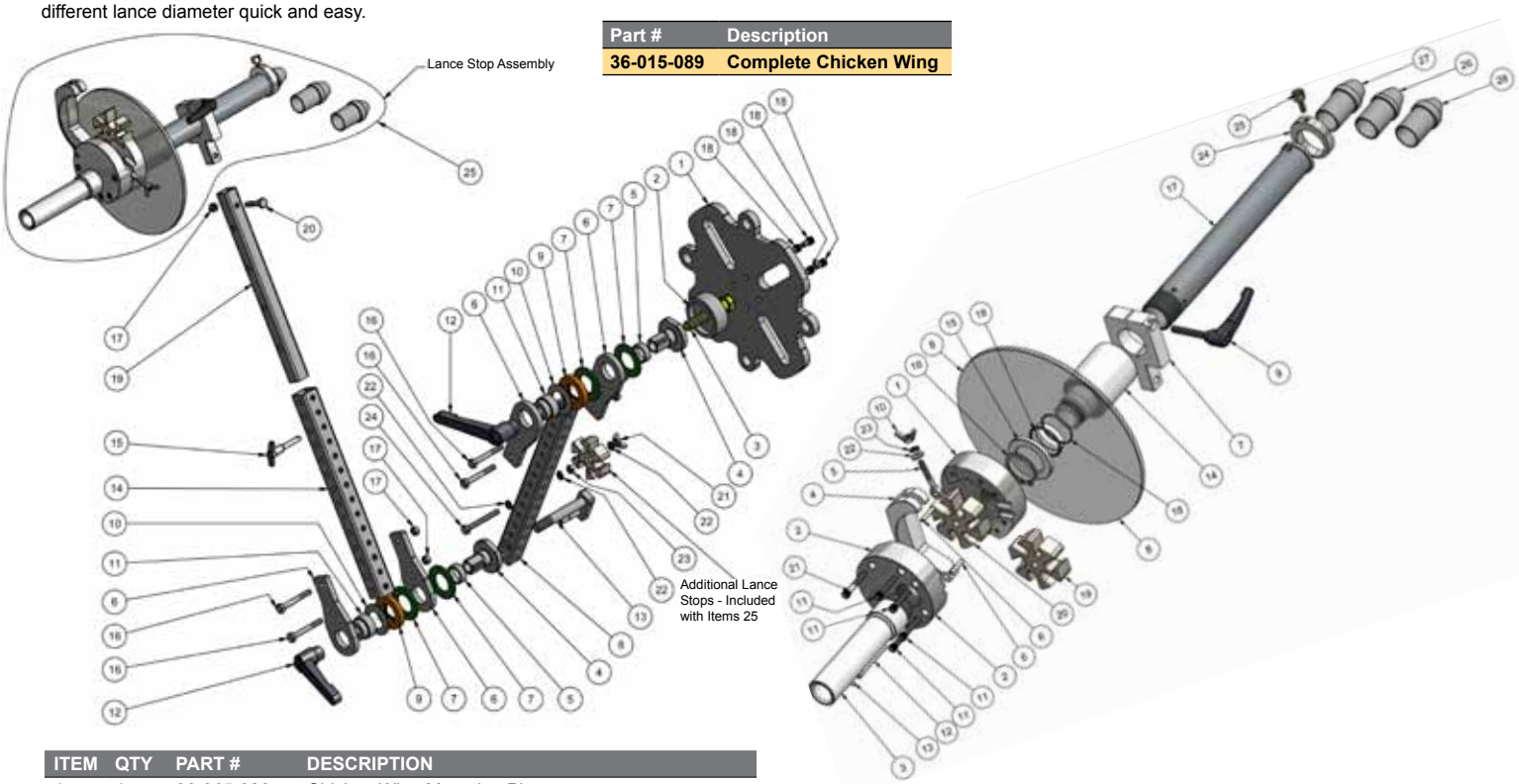

ITEM	QTY	PART #	DESCRIPTION
1	1	**36-015-026**	Chicken Wing Mounting Plate
2	1	**36-015-025**	Clutch Mounting Plate
3	1	**10-121-325**	Hex. Head Bolt 5/8"-11 x 3-1/4" long
4	2	**36-015-046**	Limiter - AWD Modified Torque
5	2	**36-015-034**	Bearing - Torque Limiter
6	4	**36-015-016**	Pivot Mounting Plate
7	4	**36-015-033**	Torque Limiter Fiber Washer
8	1	**36-015-018.1**	Telespar Arm
9	2	**36-015-035**	Torque Limiter Spacer (Orange)
10	2	**36-015-032**	Spring Washer
11	2	**36-015-023**	Spacer for Torque Limiter
12	2	**36-015-028**	Handle
13	1	**36-015-068**	Pivot Pin & Locking Plate Assembly
14	1	**36-015-019**	Telespar Arm
15	1	**36-015-027**	Extension Locking Pin
16	4	**10-015-250**	Hex. Head Bolt 5/1"-18 x 2-1/2" long
17	5	**10-100-003**	Nylon Lock Nut 5/16"-18 SS
18	4	**10-002-050**	SHCS 5/16"-18 x 1/2" long SS
19	1	**36-015-088**	Telespar Extension Arm
20	1	**10-015-150**	Hex. Head Bolt 5/16"-18 x 3" long
21	1	**36-015-076**	Wing Nut 5/16"-18 SS
22	3	**10-020-002**	Lock Washer 5/16" SS
23	1	**10-100-006**	Jam Hex. Nut 5/16"-18 SS
24	1	**10-060-275**	Hex. Head Bolt (full thread) 5/16"-18 x 2-3/4" long SS.
25	1	**36-015-082-3**	Multi Lance Stop Assembly

ITEM	QTY	PART #	DESCRIPTION
1	1	36-015-070	Lance Stop Body - Part 1
2	1	36-015-072	Lance Stop Body - Part 2
3	1	36-015-073	Lance Guide Tube
4	1	36-015-071	Latch - Lance Stop Holder
5	1	36-015-074	Latch Bolt
6	2	36-015-080	Dowel Pin
7	1	36-015-069	Clamp
8	1	36-015-044	Splash Shield (1.5" Size)
9	1	36-015-031	Handle
10	1	36-015-075	Wing Nut
11	4	10-001-125	SHCS 1-1/4" long
12	1	36-015-077	Latch Pivot Pin
13	1	10-022-031	Retaining Clip
14	1	36-015-081	Extension Tube Holder
15	1	36-015-084	Splash Shield Retaining Ring
16	1	10-024-150	Retaining Clip (5100-150) SS
17	1	36-015-087	Extension Tube
18	2	30-002-126	O-Ring Dur. 70
19	1	36-015-007.1	Lance Stop - Parker
20	1	36-015-007.2	Lance Stop - Spir Star
21	1	10-001-150	SHCS 1-1/2" long
22	1	10-010-003	Flat washer
23	1	10-020-001	Lock washer
24	1	36-015-159	Retaining Ring - Guide Bushing
25	1	36-015-160	Hex. Head Thumb Screw
26	1	36-015-161	Flex Lance - Guide Bushing 0.625 I.D.
27	1	36-015-162	Flex Lance - Guide Bushing 0.750 I.D.
28	1	36-015-163	Flex Lance - Guide Bushing 0.437 I.D.

Change of Lance Stop Size:

1. Unscrew **Cover**.
2. Open **Lance Stop Retainer Latch**.
3. Pull out **Lance Stop Insert**
4. Feed lance into **Support Tube**.
5. Select **Stop** size and install **Insert**.
6. Close **Latch** and replace **Cover**.

Spir-Star
Part # 36-015-007.2

Parker
Part # 36-015-007.1

Flex Lance Safety Grip

The **FLEX LANCE SAFETY GRIP** is designed to minimize the risk of injury to flex lance operators caused by a live nozzle exiting the tube unexpectedly. The comfortably contoured handle makes it easy to hold the **SAFETY GRIP** against the tube sheet, allowing retraction of an active nozzle into a stainless steel sleeve where the force of the jets is dissipated.

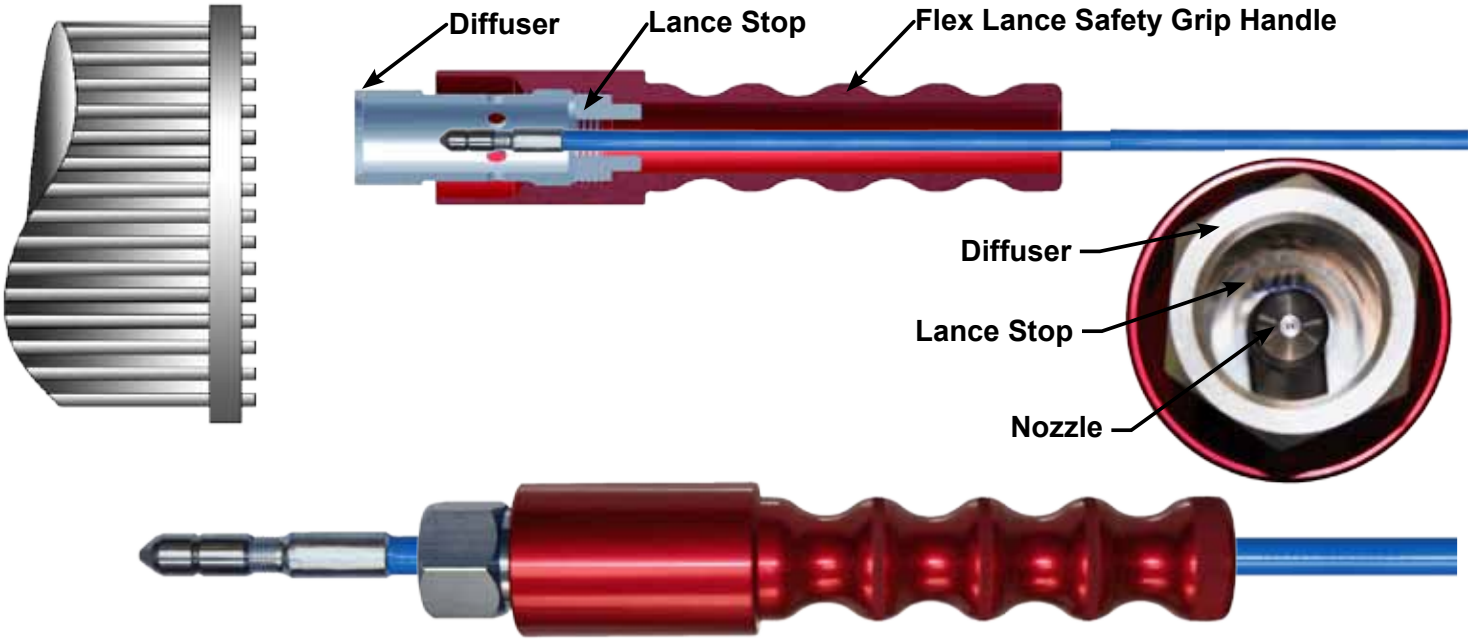

The **FLEX LANCE SAFETY GRIP** is simple to install and is quickly adapted to handle various lance sizes by selecting the appropriately sized **LANCE STOP**.

Part #	Flex Lance Safety Grip
35-009-000	COMPLETE ASSEMBLY: Small Flex Lance Safety Grip*
35-009-001	HANDLE: Small Flex Lance Safety Grip
35-009-007	DIFFUSER: Small Flex Lance Safety Grip

Installation of LANCE STOPS: Simply unscrew the **DIFFUSER** from the **SAFETY GRIP HANDLE**, which will allow the **LANCE STOP** to be removed. Insert the new lance into the back of the **SAFETY GRIP HANDLE**. Select the correct size **LANCE STOP** for the lance to be used and place it onto the lance behind the nozzle end fitting. Insert the nozzle through the **DIFFUSER** and tighten the assembly into the **HANDLE**. *(Note: the larger diameter end of the Lance Stop must be next to the end fitting.)*

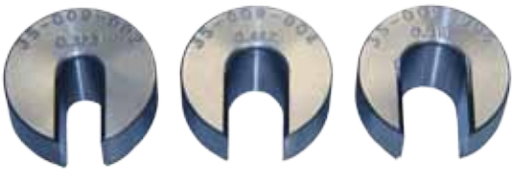

Part #	Lance Stop Description
35-009-002	Stop .323 Flex Lance Safety Guard Lance
35-009-003	Stop .390 Flex Lance Safety Guard Lance
35-009-004	Stop .442 Flex Lance Safety Guard Lance (2005 Lance)
35-009-005	Stop .510 Flex Lance Safety Guard Lance (2006 Lance)
35-009-006	Stop .725 Flex Lance Safety Guard Lance (2108 Lance)
35-009-010	Stop .290 Flex Lance Safety Guard Lance (3/2 & 3004 Lance)
35-009-011	Stop .530 Flex Lance Safety Guard Lance (6005 Lance)
35-009-012	Stop .570 Flex Lance Safety Guard Lance (1/4" NPT & 9/16" Rigid Lance Size)
35-009-013	Stop .470 Flex Lance Safety Guard Lance (4005 Lance)
35-009-014	Stop .870 Flex Lance Safety Guard Lance

Hose Whip Checks

APS strongly recommends the use of "whip check" hose restrainers in any water jetting operation. These are perhaps the simplest and least expensive safety measure to implement. A "whip check" can be attached at any point where two hoses are joined, or to a pump's fluid end at the discharge side, or where a hose attaches to any piece of water jetting equipment such as a water blasting lancing or cutting system.

When a high pressure hose is joined to a piece of equipment, the **whip check should be used to restrain the movement of the pressurized hose** should it become uncoupled, thereby allowing operators to get away and perform a safe, orderly system shut-down.

Part #	Description
43-010-001	SAFETY WHIP CHECK, 21" GALVANIZED WIRE (1/8") & SS SPRINGS (1/2" - 1/1/4" HOSE)
43-010-002	SAFETY WHIP CHECK, NYLON W/RUBBER GROMMET STOPS (APP. 31-1/2" LONG)
43-010-004	SAFETY WHIP CHECK, NYLON 2-PLY W/RUBBER GROMMET STOPS (APP. 64" LONG)
43-010-005	SAFETY WHIP CHECK, NYLON 2-PLY W/RUBBER GROMMET STOPS (APP. 44" LONG)

15K Foot Operated Dump Style Control Guns

Typical Foot Gun Hookup These foot operated control valves (foot guns) are designed for smooth reliable operation. They are easily rebuilt in the field in 30 seconds by unscrewing the dump tube, which removes the used valve assembly. The operator then snaps a new cartridge style valve into the dump tube adapter and returns the whole assembly to the gun.

To prevent low pressure water from the flex lance nozzle spraying back towards the operator, when the foot gun is in dump mode, it is recommended that a **Nozzle Shut-off Valve** (**Part # 60-010-050**) is used between the foot gun and the flex lance. This will help to minimize cleanup at the end of the job and greatly assist the operator when inserting the lance into the next tube. (see diagram above)

Strain Relief Whip Hoses (**Part # 43-004-003**) are designed to relieve the forces on the flex lance end fitting, which extends the life of the lance, and reduces the risk to the operator associated with the end fitting failing prematurely.

Part #	Description
61-010-012	Complete foot Style control gun

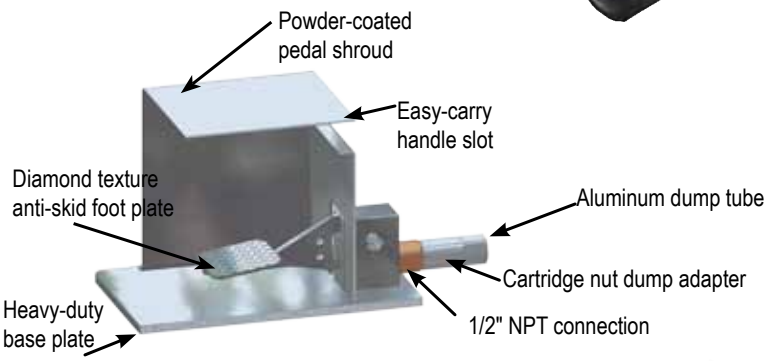

The APS 15K Foot Operated Control Guns feature:

- Fully enclosed safety shrouds.
- Easy-carry handles.
- Quick-change cartridge overhaul.
- Non-slip foot pedals.

Easy-Change Cartridge Assembly The cartridge assembly enables rebuilding of the gun in the field in 30 seconds or less with common tools.

#60-010-020

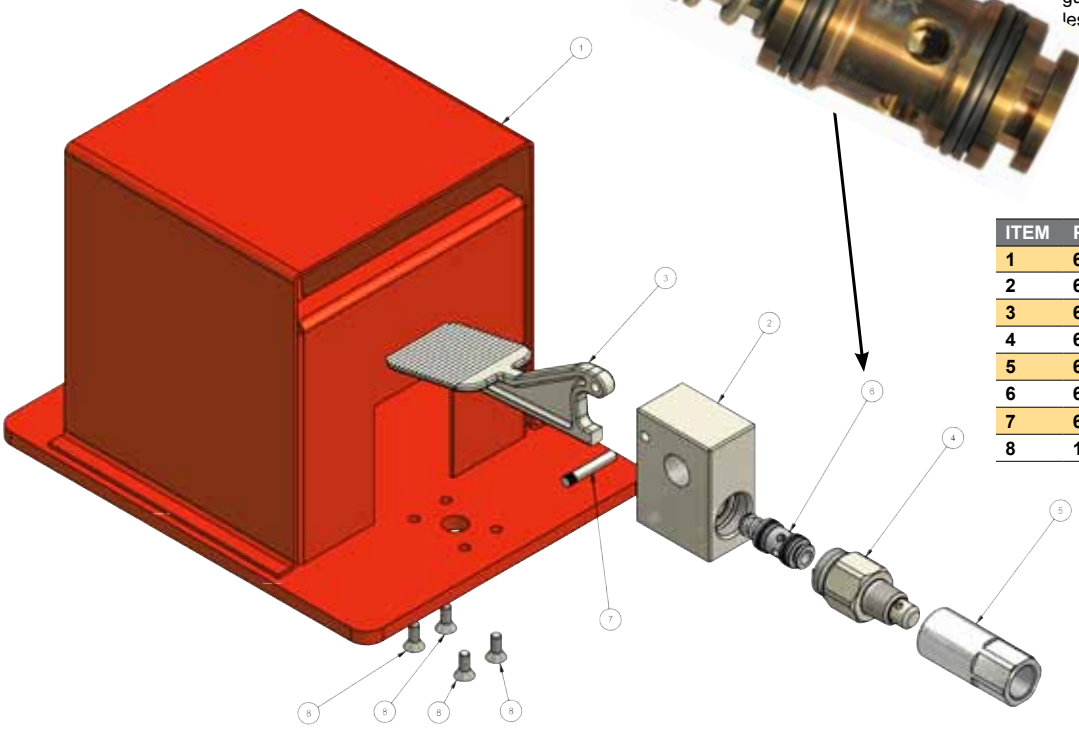

ITEM	Part #	Descriptions
1	61-010-004	Foot Gun Base Complete Assy
2	61-010-003	15K Foot Gun Block
3	61-010-007	Foot Pedal Casting
4	61-010-001	15K Dump Adapter
5	61-010-002	Dump Tube
6	60-010-020	15K Cartridge Assembly
7	60-010-021	Trigger Pivot Pin
8	10-201-063	1/4”-20 C’Sink Screw 0.625 Long

15K High-Flow Dump Style Foot Operated Control Gun Exploded View & Parts List

Part #	Description
61-050-001	15K High-Flow Foot Gun

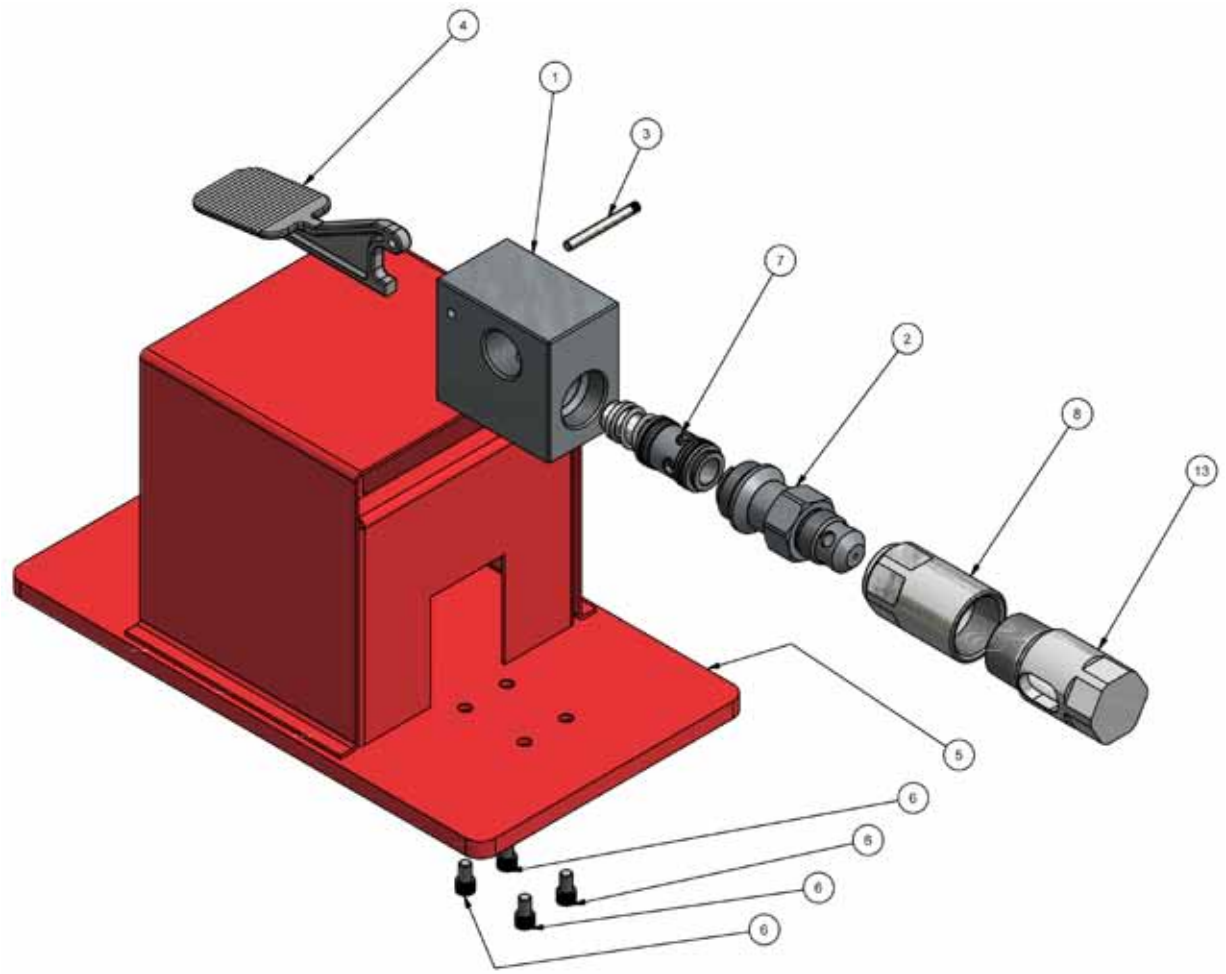

Item	QTY	Part #	Description
1	1	**61-050-011**	HIGH FLOW FOOT GUN BLOCK
2	1	**61-050-002**	HIGH FLOW FOOT GUN - DUMP ADAPTER
3	1	**61-020-005**	PIVOT PIN
4	1	**61-010-007**	FOOT PEDAL
5	1	**61-050-010**	HIGH FLOW FOOT GUN BASE - ASSEMBLY
6	4	**10-002-050**	5/6”-18 SS SHCS 1/2” LONG
7	1	**61-050-012**	HIGH FLOW FOOT GUN - CARTRIDGE ASSEMBLY
8	1	**61-050-005**	HIGH FLOW FOOT GUN - DUMP TUBE
13	1	**61-050-013**	HIGH FLOW FOOT GUN - DUMP DEFLECTOR

15K Air-Operated Dump Valves

The Air-Operated Dump Valve allows an operator to remotely control pressure in cleaning applications from 15,000 psi. When air is sent to the cylinder, the valve closes and allows the system to build pressure. The valve opens when the air is exhausted, reducing system pressure to near atmospheric.

- 30-second field replaceable cartridge design for minimal downtime
- Remote pneumatic operation for reduced operator fatigue and added convenience and safety
- Inlet and outlet connections threaded 1/2 NPT
- Heavy-duty air cylinder
- All components precision machined from stainless steel

Easy-Change Cartridge Assembly The cartridge assembly enables rebuilding of the gun in the field in 30 seconds or less with common tools.

Part #	Description
61-001-007	15K Air Actuated Foot Gun
60-010-020	15K Cartridge Assembly

15K Air Actuated Foot Gun - Part # 61-001-007

ITEM	QTY	PART #	DESCRIPTION
1	1	**61-010-003**	15K Foot Gun Block
2	1	**61-001-002**	Block, 15K Air Actuator Riser
3	1	**61-001-001**	Air Actuator Plate
4	1	**61-001-003**	Plunger 15K/20K Air Actuator Valve
5	1	**61-010-001**	15K Dump Adapter
6	1	**61-010-002**	Dump Tube
7	1	**60-010-021**	Pin, Gun Trigger Pivot Pin
8	1	**60-010-020**	15K Cartridge Assembly
10	1	**10-001-112**	SHCS 1/4”-20 SS 1-1/8” long
12	4	**10-001-200**	SHCS 1/4”-20 SS 2” long
13	1	**61-001-004**	Cylinder, Parker Air Actuated
14	1	**61-010-006**	Foot Gun Base Plate
15	4	**10-201-175**	C’sink 1/4”-20 Flat Head Socket Cap Screw 1-3/4” long SS

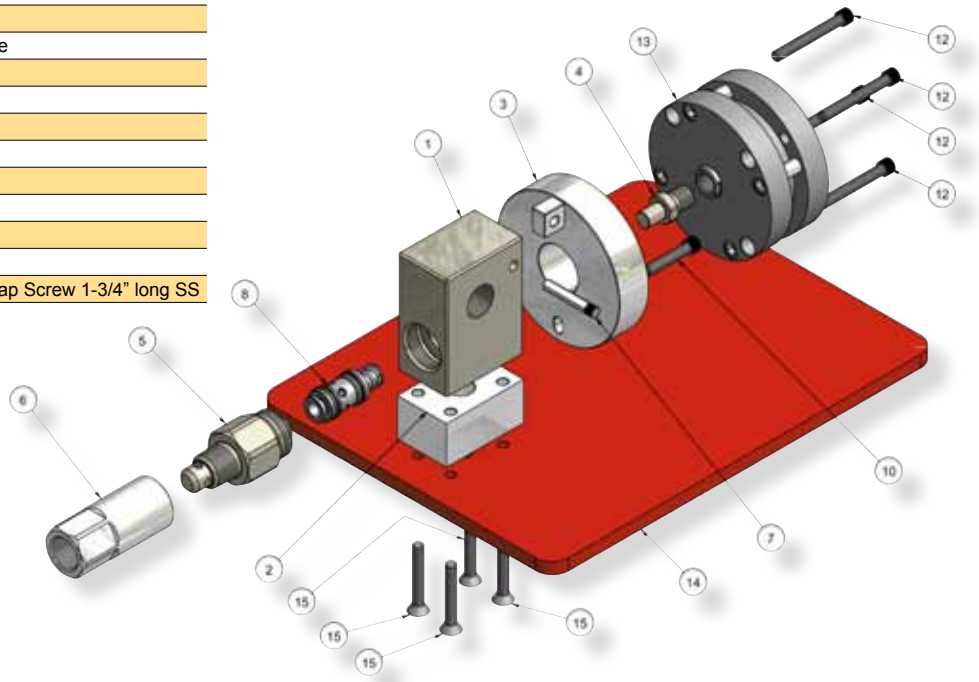

15K Hand-Held Dump Style Control Guns with 3/8” NPT Barrel

APS offers the 15,000 psi (15K) series of hand operated control guns, using the industry standard cartridge* style dump valve. These guns have been carefully designed to incorporate all the features that are demanded by experienced operators.

- The cartridge valve* enables the gun to be rebuilt in the field in 30 seconds or less. This will minimize down time and increase productivity.
- The cartridge valve* also keeps the trigger force to a minimum, which reduces operator stress.
- These guns are lighter in weight -13 - 15lbs (depending on barrel dia.) resulting in less operator fatigue.
- The adjustable comfort-contoured shoulder stocks and front hand grips contribute to ease of use for operators, tending to diminish fatigue.
- These guns are standard with 48” front barrels, for operator safety.
- All working components are stainless steel for corrosion resistance and durability.

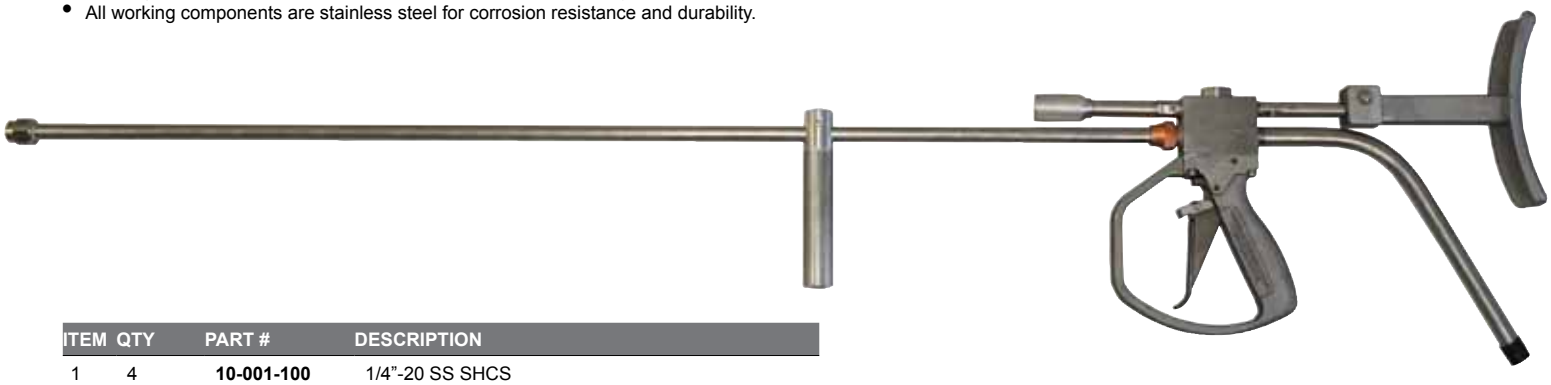

ITEM	QTY	PART #	DESCRIPTION
1	4	**10-001-100**	1/4”-20 SS SHCS
2	1	**10-010-001**	Plain 375 SS washer
3	1	**20-012-048**	15K Gun Barrel 48” long
4	1	**60-010-001**	Gun Handle
5	1	**60-010-003**	Shoulder Stock
6	1	**60-010-004**	Gun Block 15K
7	1	**60-010-005**	“Handi Change” Cartridge Nut - 15K
8	1	**60-010-009**	Shoulder Stock Tube
9	1	**60-010-012**	Inlet Tube 15K
10	1	**60-010-017**	3/8” Barrel/Shoulder Stock Cam Stud (incl. locknut)
11	1	**60-010-020**	15K Cartridge Assembly
12	2	**60-010-021**	Trigger Pivot Pin
13	1	**60-010-024**	Barrel Bushing 1/2” to 3/8”
14	1	**60-010-025**	3/8” x 1/4” Nozzle Holder
15	1	**60-010-057**	Dump Tube Assembly
16	1	**60-010-061**	Trigger& Cam Assy w/Safety Latch
17	1	**60-010-029**	Quick Adjust Front Handle

Part #	Description	Barrel
60-010-052	**Complete hand-held dump Style control gun**	3/8”

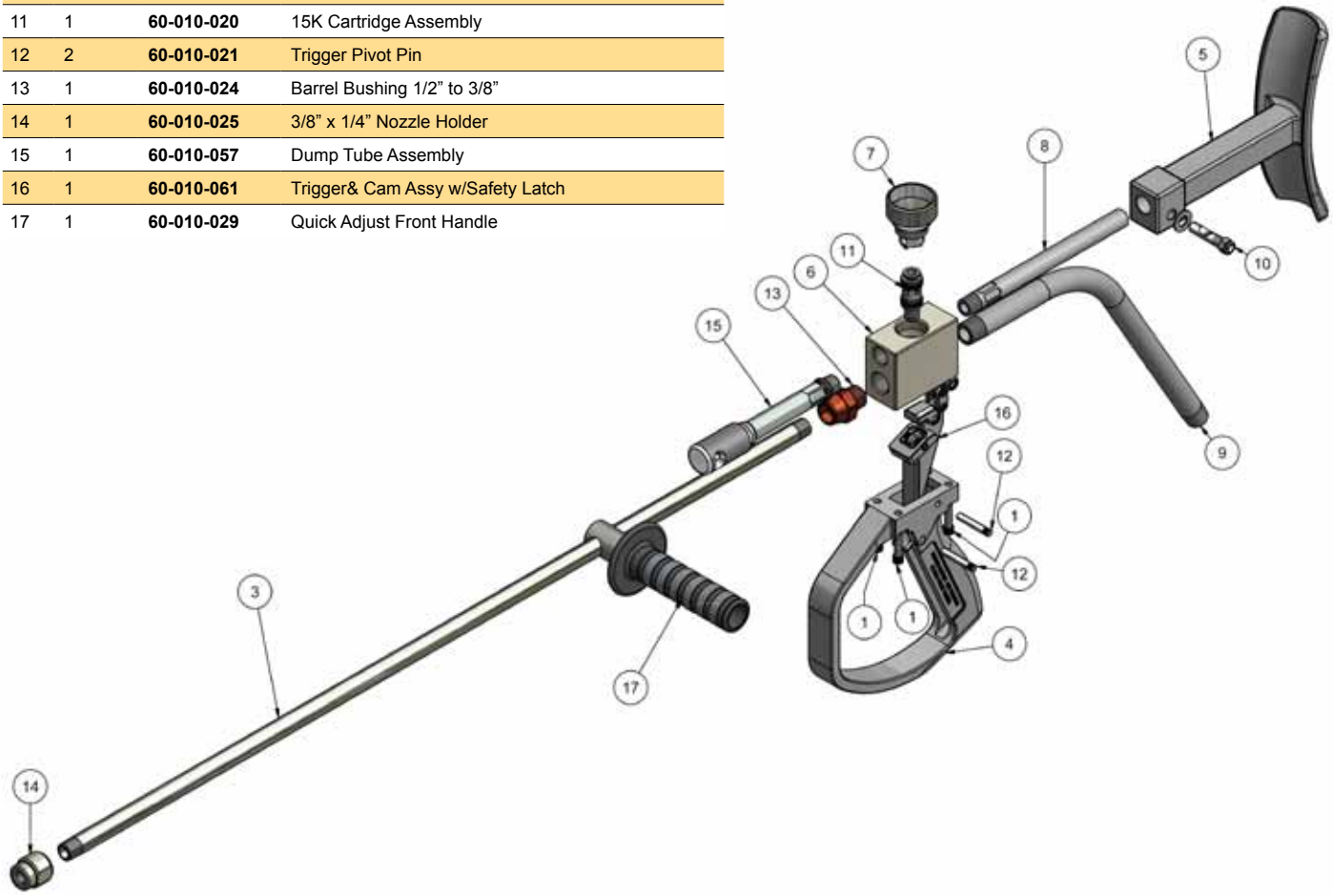

15K Hand-Held Dump Style Control Guns with 1/2” NPT Barrel

APS offers the 15,000 psi (15K) series of hand operated control guns, using the industry standard cartridge* style dump valve. These guns have been carefully designed to incorporate all the features that are demanded by experienced operators.

Part #	Description	Barrel
60-010-051	**Complete hand-held dump Style control gun**	1/2”

ITEM	QTY	PART #	DESCRIPTION
1	1	**60-010-004**	Gun Block 15K
2	1	**60-010-003**	Shoulder Stock
3	1	**60-010-001**	Gun Handle
4	1	**60-010-005**	“Handi Change” Cartridge Nut 15K
5	1	**60-010-020**	15K Cartridge Assy.
6	1	**60-010-057**	Dump Tube Assembly
7	1	**60-010-009**	Shoulder Stock Tube
8	1	**60-010-012**	Inlet Tube
9	1	**20-013-048**	Front Barrel 48” long, 1/2” NPT at each end
10	1	**60-010-028**	Front Handle
11	1	**60-010-026**	Nozzle Holder 1/2” NPT x 1/4” NPT
12	1	**60-010-027**	Front Handle Cam Sud 1/2” Barrel
13	1	**60-010-017**	Shoulder Stock Cam Stud assy.
14	2	**10-010-001**	3/8” Plain 3/8” Washer SS
15	2	**60-010-021**	Trigger Pivot Pin
16	4	**10-001-100**	SHCS 1/4” -20 SS
17	1	**10-010-061**	Trigger & Cam Assy. w/Safety Latch

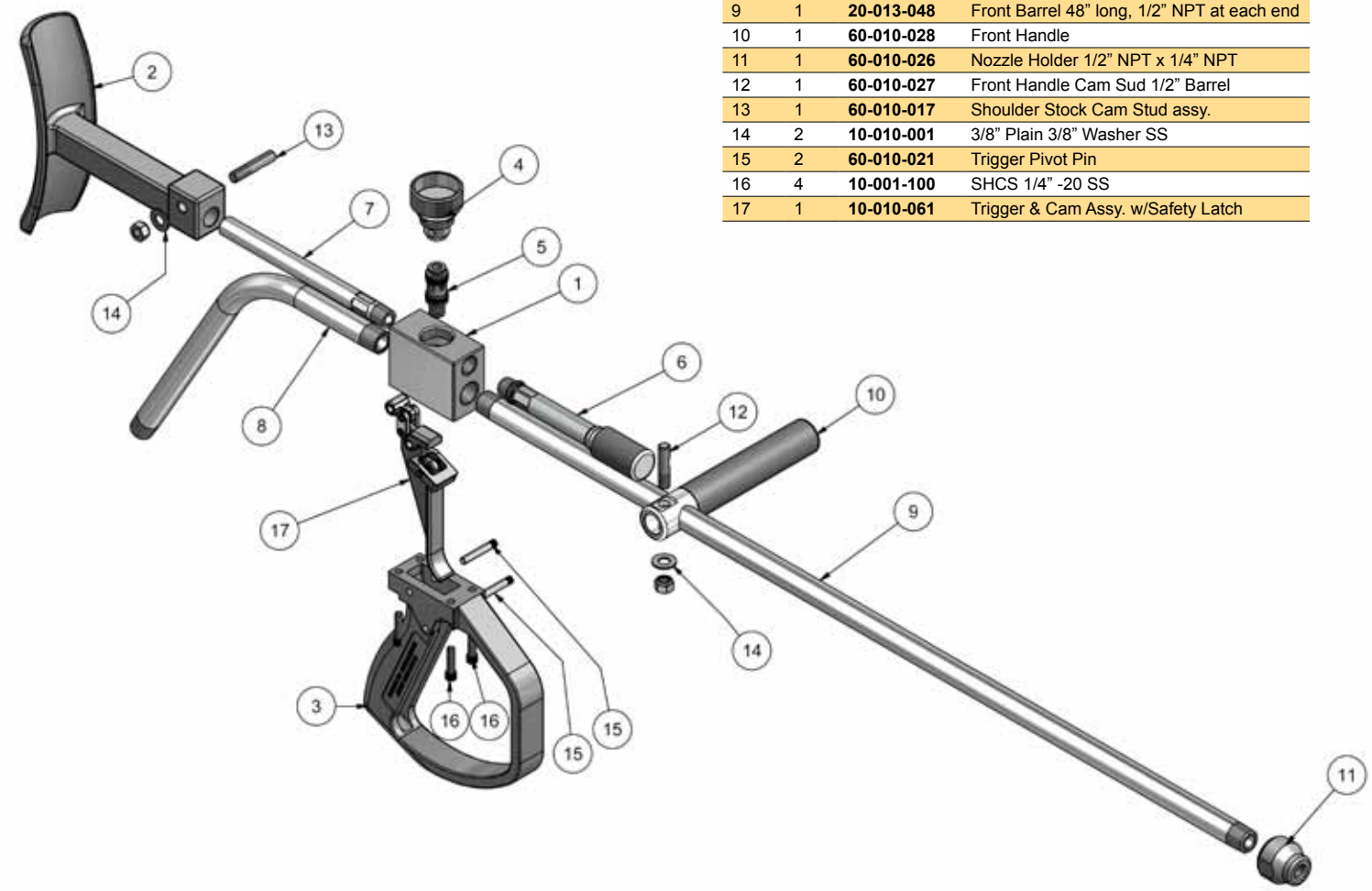

15K Hand-Held Double-Dump Control Guns

- There is an increasing demand for the extra safety of control guns which incorporate dual dump ports. The Advanced Pressure Systems 15K Double Dump Control Guns feature this added security together wit the ergonomic advantages and operator comfort of a specially designed front handle.
- This handle is at right angles to the axis of the barrel, which conforms to the natural alignment of the hand and arm of the operator. Some other guns simply use two standard handles, which are cumbersome, uncomfortable to use and are heavier.
- The APS Double Dump Guns are available in 3/8" barrel size.

Part #	Description	Barrel
60-050-006	Complete hand-held double dump Style control gun	3/8

ITEM	QTY	PART #	DESCRIPTION
1	1	**60-010-001**	Gun Handle
2	1	**60-010-009**	Shoulder Stock Tube
3	1	**60-010-003**	Shoulder Stock
4	1	**60-010-012**	Inlet Tube 15K
5	3	**60-010-024**	Barrel Bushing 1/2” x 3/8”
6	2	**60-010-020**	15K Cartridge Assembly
7	1	**60-010-022**	Pivot Bushing
8	3	**60-010-021**	Trigger Pivot Pin
9	1	**60-010-025**	Nozzle Holder 3/8” x 1/4”NPT
10	8	**10-001-100**	1/4”-20 SHCS, 1” long
11	2	**60-010-004**	Gun Block 15K
12	2	**60-010-005**	“Handi Change” Cartridge Nut - 15K
13	1	**60-010-017**	Shoulder Stock Cam Stud Assy.
14	1	**60-050-002**	Double Dump Gun Handle
15	1	**20-012-008**	Nipple 3/8” NPT x 8” long
16	1	**60-050-005**	Double Dump Handle Trigger Guard
17	1	**20-012-036**	3/8” NPT Barrel 36” long
18	2	**30-001-010**	O-Ring 2-010 BUNA-N, 90 Dur.
19	1	**60-050-003**	Double Dump Front Trigger
20	2	**60-010-057**	Dump Tube Assembly
21	1	**60-010-061**	Trigger & Cam w/Safety Latch
22	1	**10-016-075**	Bolt, Hex Head 3/8”-16 X 3/4” SS

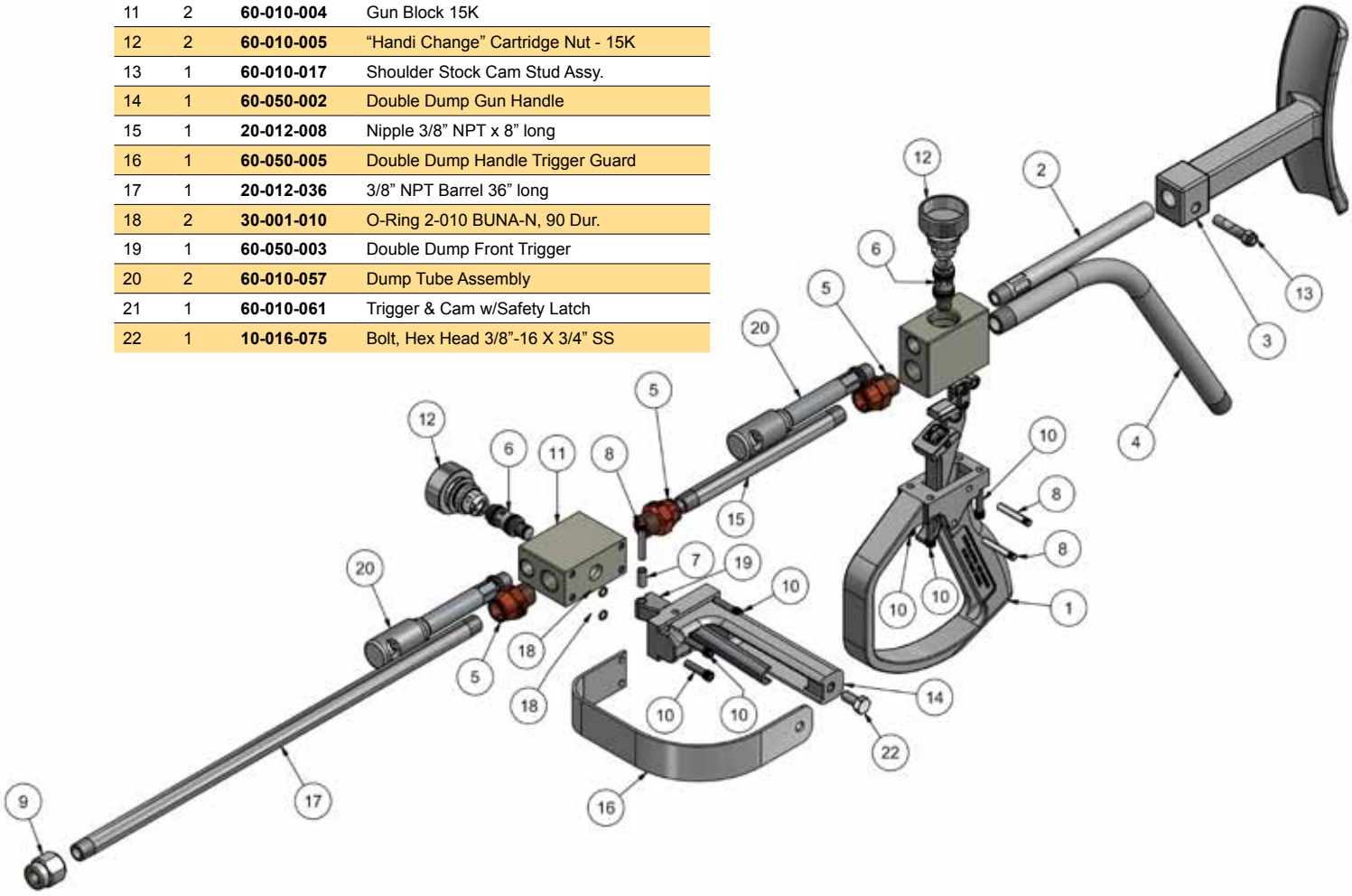

15K Hand-Held Zero-Thrust Control Guns

- These guns are designed primarily for underwater use, where the self cancelling forwards and backward thrusts allow the user to carry out blasting operations without being propelled away from the intended work area.
- They also have application on dry land where a balanced tool is needed, such as in a suspended gondola on the side of a building.
- The quick change rebuild cartridge allows field overhaul in 30 seconds.
- For corrosion resistance, all components are of high grade stainless steel, and the complete assembly weighs just 16.45 lbs (7.47 Kg.)

Part #	Description	Barrel
60-010-035	Complete zero thrust Style control gun	1/2

ITEM	QTY	PART #	DESCRIPTION
1	1	**60-010-001**	GUN HANDLE
2	1	**60-010-020**	CARTRIDGE ASSY. 15K
3	1	**60-010-005**	CARTRIDGE NUT
4	1	**60-010-003**	TRIGGER SAFETY LATCH PIN
5	2	**60-010-021**	TRIGGER PIVOT PIN
6	4	**10-001-100**	1/4”-20 x 1” SS. SHCS
7	1	**60-010-034**	ADAPTER for DIFFUSER
8	1	**20-004-004**	WAFER TEE 1/2” NPT 15K
9	1	**20-013-008**	NIPPLE 8” LNG. 1/2”NPT 15K
10	1	**20-013-036**	NIPPLE 36” LNG. 1/2” NPT 15K
11	1	**60-010-032**	DIFFUSER
12	1	**60-010-033**	JAM NUT - DIFFUSER
13	2	**60-010-026**	NOZZLE HOLDER 1/2” NPT x 1/4” NPT
14	1	**20-011-008**	HEX. NIPPLE 1/2” x 1/2” NPT
15	1	**20-013-006**	NIPPLE 6” LNG 1/2”NPT 15K
16	1	**60-010-028**	FRONT HANDLE
17	1	**60-010-027**	FRONT HANDLE CAM STUD (incl. nut)
18	1	**60-010-004**	GUN BLOCK 15K
19	1	**60-010-057**	DUMP TUBE ASSEMBLY
20	1	**60-010-061**	Trigger & Cam w/Safety Latch

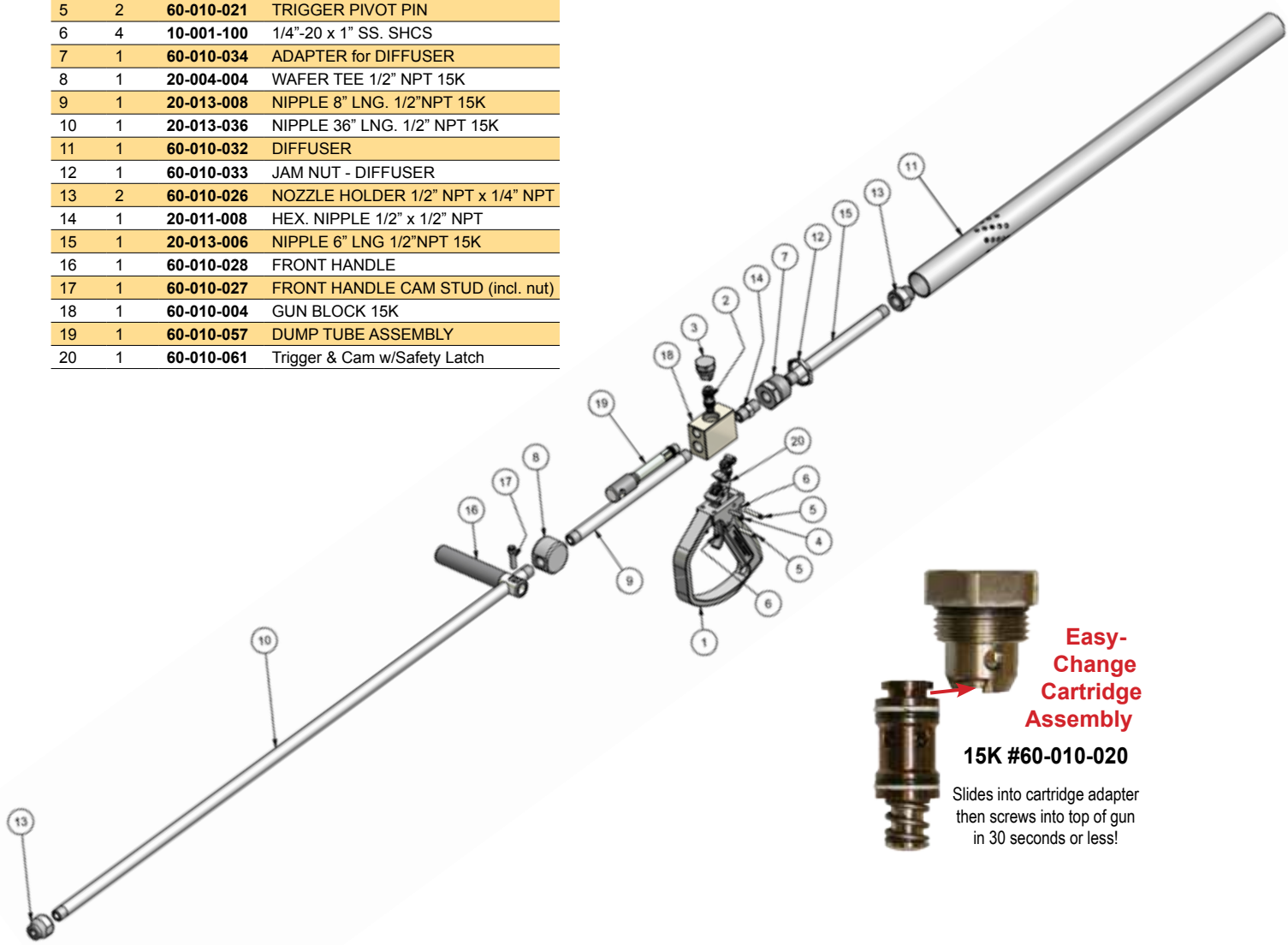

Easy-Change Cartridge Assembly

15K #60-010-020

Slides into cartridge adapter then screws into top of gun in 30 seconds or less!

FDV-15K Flow Divider Valve

The new Advanced Pressure Systems **Flow Divider Valve (FDV)** is for applications where two dump style guns are to be operated from one pump. The FDV will maintain full pressure to either gun when the other gun is dumping. When both guns are operating, the flow and pressure will be unaffected. These valves are very easy to set up. They are of very rugged construction, and the only wear part is a cartridge which can be quickly changed in the field.

Part #	Description
70-022-001	Complete 15K flow divider valve

without Gauge

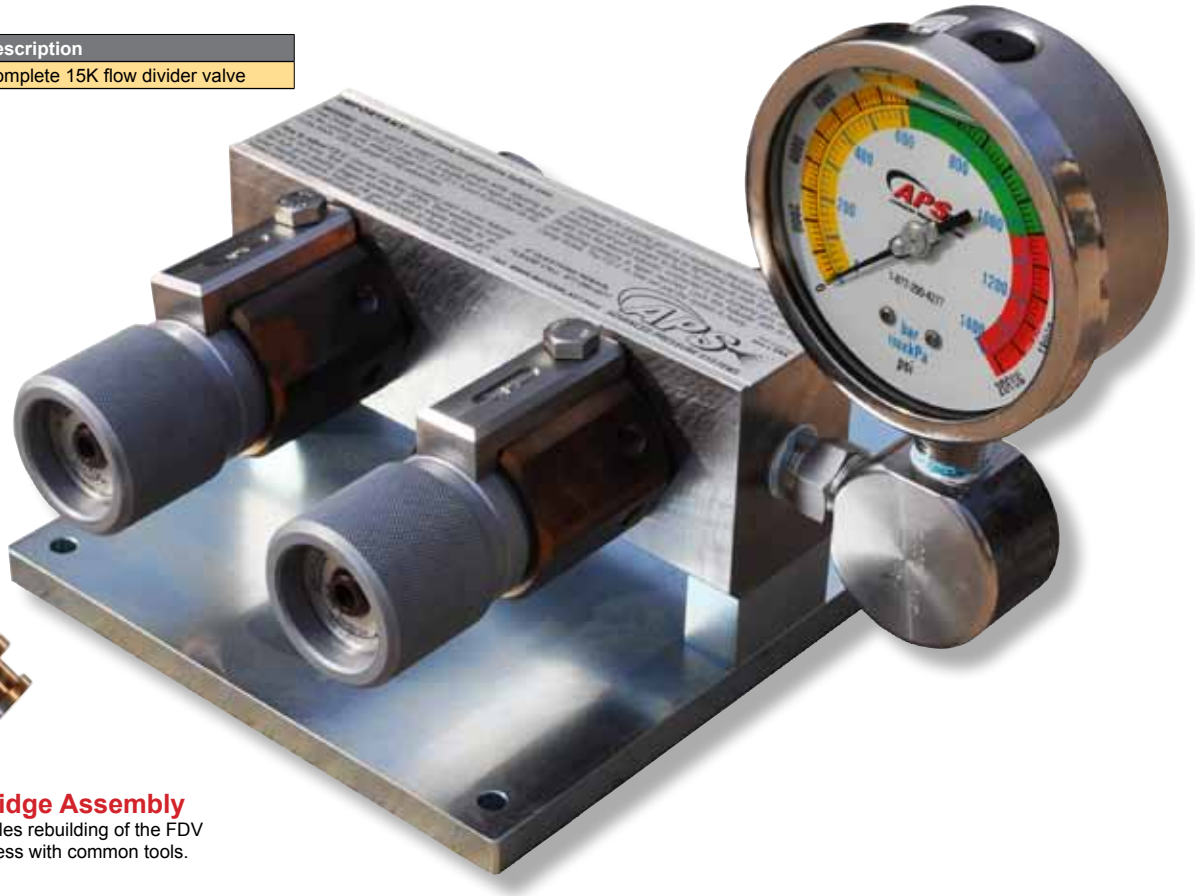

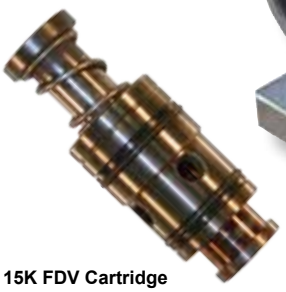

15K FDV Cartridge
#70-010-004

Easy-Change Cartridge Assembly

The cartridge assembly enables rebuilding of the FDV in the field in 30 seconds or less with common tools.

ITEM	QTY	PART #	DESCRIPTION
1	1	70-022-003	15K Flow Divider Valve (FDV) Block
2	2	70-022-017	15K FDV Adjuster Adapter
3	2	70-110-007	15K FDV Discharge Adapter, 1/2” NPT(F)
4	2	70-022-013	Spacer Block
5	1	70-022-014	15K/20K FDV Base Plate
6	2	70-022-004	15K/20K FDV Adjuster Handle
7	2	70-010-013	15K/20K FDV Discharge Diffuser
8	2	30-001-018	O-Ring 2-018
9	2	70-010-004	15K FDV Cartridge Assembly
12	2	10-016-075	Bolt, Hex. Head 3/8”-16 x 3/4” SS
13	2	70-110-008	15K FDV Lock Down Clamp
14	4	10-002-150	SHCS 5/16”-18 x 1-1/2” long SS
15	1	70-022-009	Operating Instructions Decal
16	4	30-001-123	O-Ring 2-123

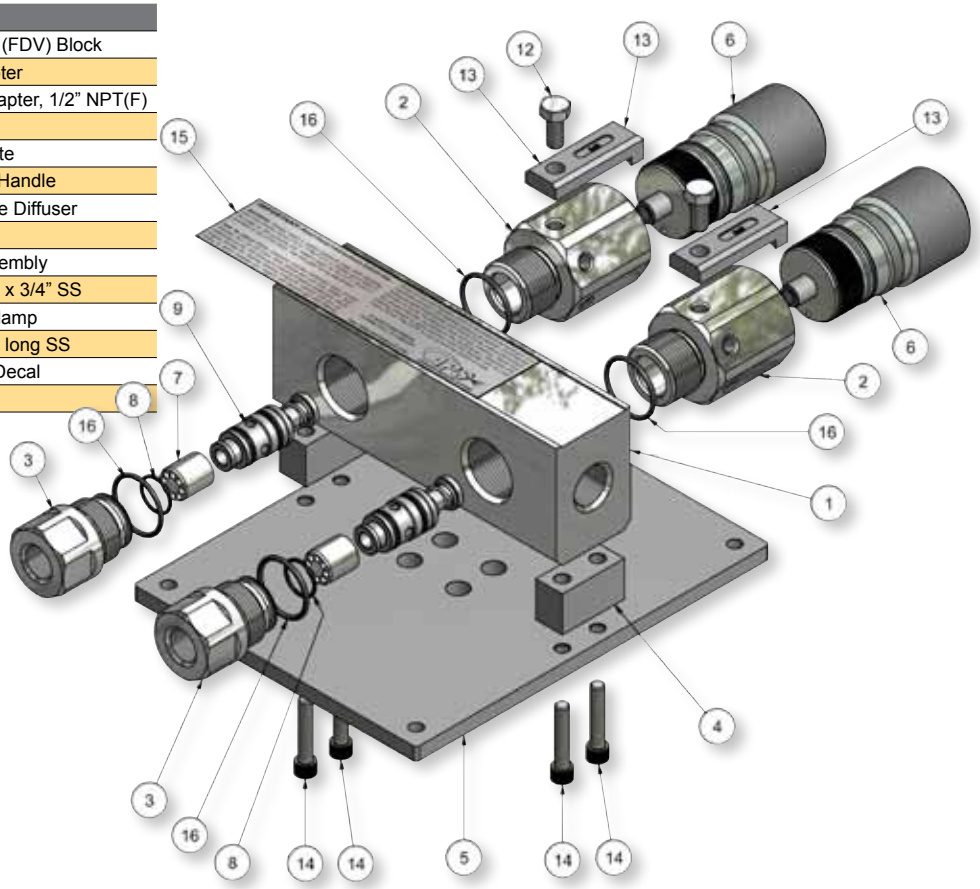

15K Pressure Regulating Valve (By-Pass Valve)

A Pressure Regulating Valve (PRV) is used on both diesel and electric pumping units to divert a portion of the flow to a low pressure outlet. It is really a hand adjusted needle valve, and it can be used to control pressure when the application requires a flow at the low end of the pumping unit's operating range. For electric units a PRV is required equipment, because the speed of the drive is not adjustable.

The design provides:

- Simple field rebuild using a cartridge unit. Down time is two minutes or less.
- This includes the locking of the adjuster handle, after the pressure is set.
- Easy hand adjustment without the need for wrenches.
- All components machined from stainless steel.
- Direct mounting to fluid end discharge manifold.

Part #	Description
65-110-015	Complete pressure regulating valve

Part #	Description
65-010-004	Gauge Board Complete

Easy-Change Cartridge Assembly

The cartridge assembly enables rebuilding of the FDV in the field in 30 seconds or less with common tools.

15K FDV Cartridge
#70-010-004

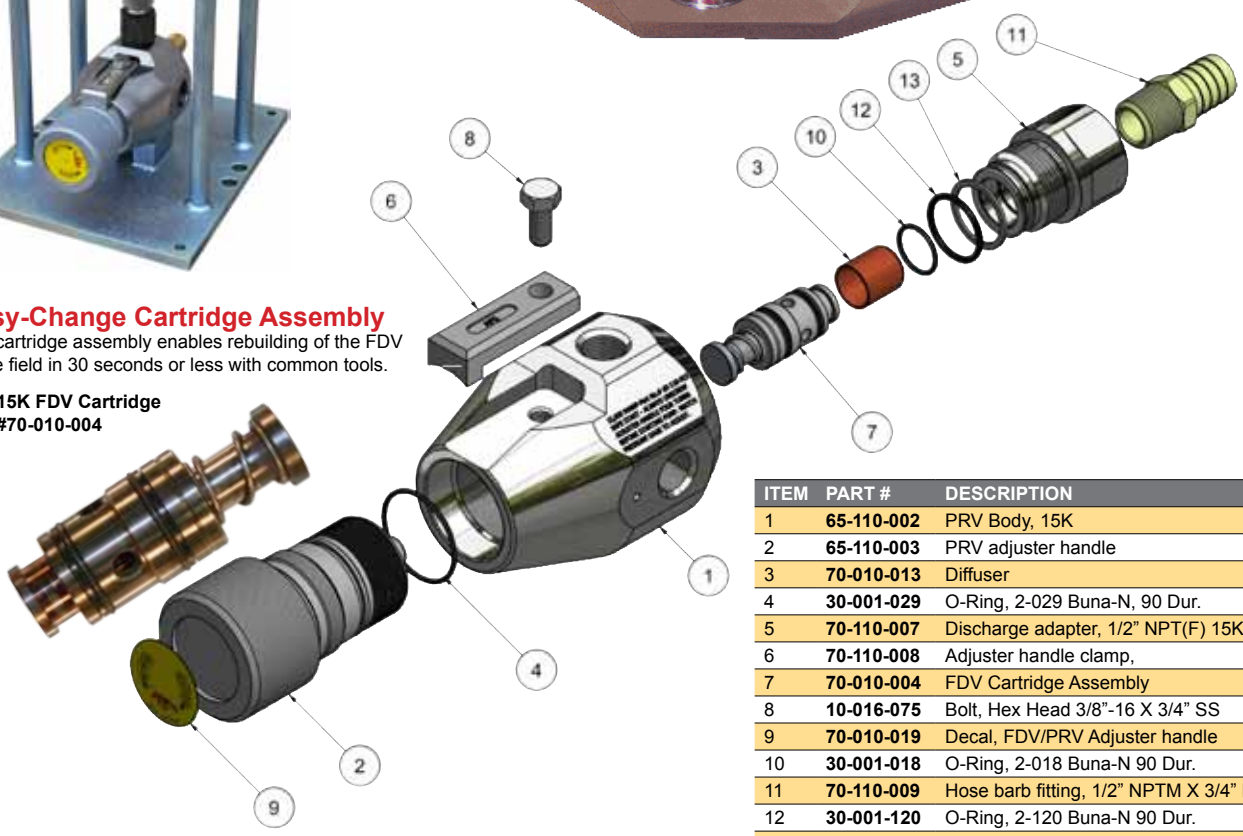

ITEM	PART #	DESCRIPTION
1	**65-110-002**	PRV Body, 15K
2	**65-110-003**	PRV adjuster handle
3	**70-010-013**	Diffuser
4	**30-001-029**	O-Ring, 2-029 Buna-N, 90 Dur.
5	**70-110-007**	Discharge adapter, 1/2" NPT(F) 15K
6	**70-110-008**	Adjuster handle clamp,
7	**70-010-004**	FDV Cartridge Assembly
8	**10-016-075**	Bolt, Hex Head 3/8"-16 X 3/4" SS
9	**70-010-019**	Decal, FDV/PRV Adjuster handle
10	**30-001-018**	O-Ring, 2-018 Buna-N 90 Dur.
11	**70-110-009**	Hose barb fitting, 1/2" NPTM X 3/4" Hose size, Brass
12	**30-001-120**	O-Ring, 2-120 Buna-N 90 Dur.
13	**30-003-120**	Parbak backup ring

Hook-up for PRV

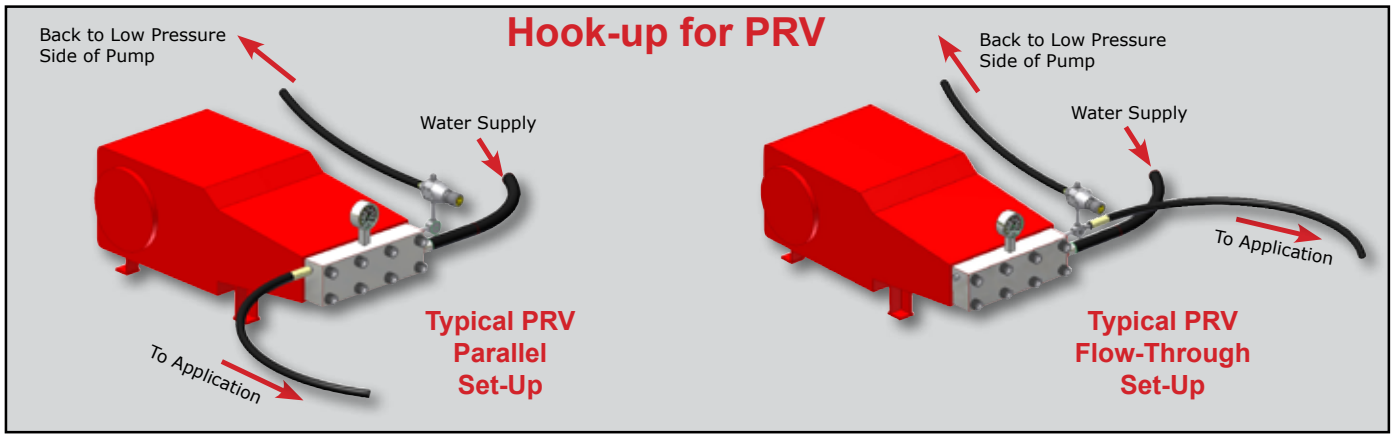

10-15K Waterblast Pressure Gauges

APS offers a complete range of pressure gauges designed specifically for water blasting applications. Features include stainless steel construction, glycerine filled, clear laminated safety glass, precision movement, easy-to-read color-coded gauge faces.

Part #	Description	PSI
35-001-001	2.5" size, 1/4" NPT (M) Mount	5-10K
35-001-002	2.5" size, 1/4" NPT (M) Mount	10-15K
35-001-003	4" size, 1/2" NPT (M) Mount	10-15K
35-001-004	6" size, 1/2" NPT (M) Mount	10-15K
35-001-009	4" size, 1/2" NPT (M) Mount	0-5K
35-001-024	4" size, 1/2" BSPP (M) Mount	15K

#35-001-024

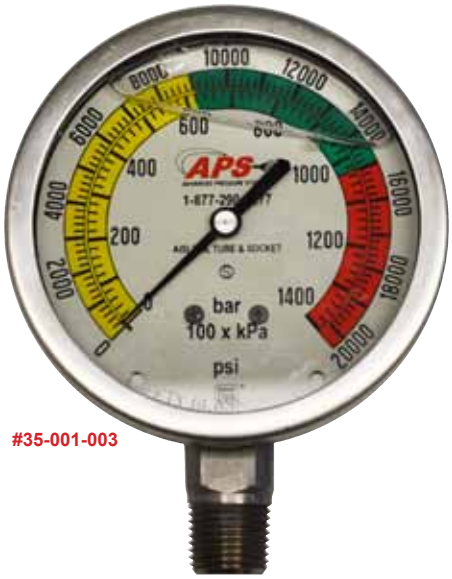

#35-001-003

APS offers a complete line of coning and threading tool kits for manually coning and threading 1/4" O.D. to 9/16" O.D. tubing.

There are three different tool kit versions, "High" pressure, and the "Complete Kit" that contains both the Medium and the High Pressure tools. All items are conveniently packaged in a sturdy hand carry tool case with removable top tray. The unique coning and threading tool designs allows for interchange ability between components, eliminating multiple tool inventories.

Coning and Threading Tool Kit

Threading Tool
#24-017-001

Coning Tool
#24-017-010

Threading Die
#24-018-045

5-Piece Micro Pick Set
#15-099-126

Pin Gage Set
 # 15-099-000 (.011"-.060") Range
 # 15-099-001 (.0115"-.0605") Range

Nozzle Cleaners
#15-099-125
Standard Set - No.6 Thru 26

Pin Vise used to Clean Nozzles
 # 15-099-002 (0-.055") Range
 # 15-099-003 (.025-.075") Range

Whip Hose With Safety Shrouds

Safe operation of hand held control guns requires the use of a Safety Shroud to guard the operator from failure of the hose fitting at the point where it is connected to the gun. Both of these shrouds have a nitrile outer cover, which resists oil, water and many solvents, and an inner layer of braided stainless steel Safety Shrouds are essential equipment, and should be used in conjunction with a whip hose, which allows for connection to different high pressure sources, without the need to make frequent connections to the gun.

NEVER USE A CONTROL GUN WITHOUT A SAFETY SHROUD.

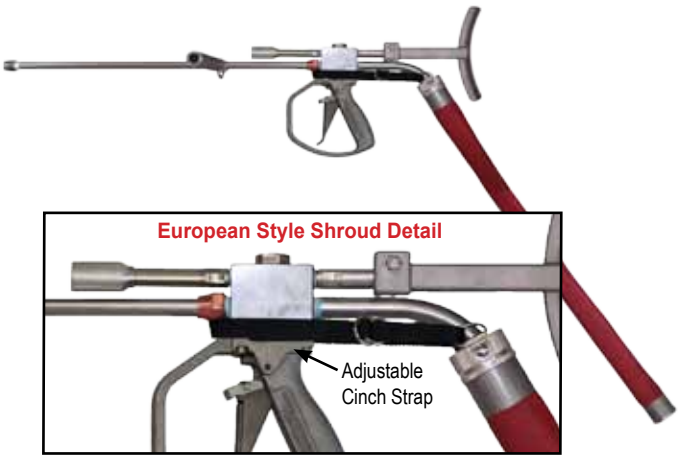

The European Type Shroud, which will fit virtually any gun, and is held in place by an adjustable strap. It is light in weight, and with universal application it is a popular alternative to the Standard Screw Type Shroud.

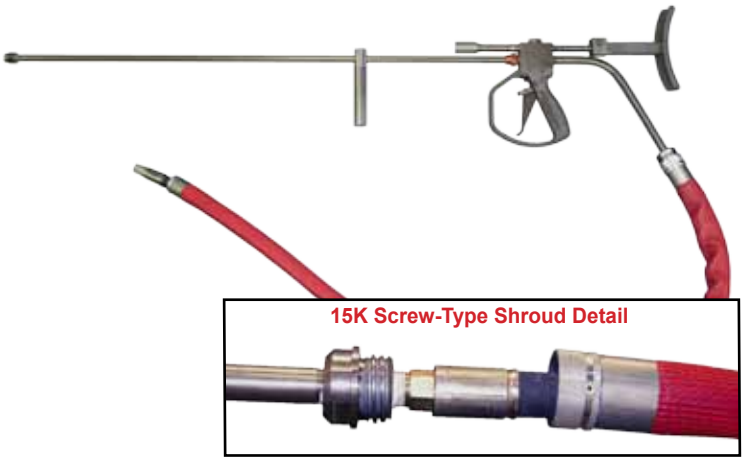

The Screw Type Shroud is held in place by a Shroud Adapter. This style is customized to fit specific guns and is very reliable and durable.

Part #	Whip Hose Shroud Assemblies
44-021-050	15-40K European Style Safety Shroud Assy. 3 Ft. Whip Hose
44-021-055	15-40K European Style Safety Shroud Assy. 6 Ft. Whip Hose
44-021-054	15-40K European Style Safety Shroud Assy. 10 Ft. Whip Hose
44-021-031	15-40K Screw Type Safety Shroud with 6 Ft. Whip Hose (6105ST x 5mm SS Type M x 9/16" MP LH SS Tube Nipple)

15K Rupture Disc Holder with Safety Shroud

A Rupture Disc is an essential component in any system which contains a positive displacement pump. It provides protection against excessive pressure building up in the water blasting equipment connected to a pump. **Advanced Pressure Systems** has designed a rugged, compact **Rupture Disc Holder**, which offers safety features to prevent the use of coins or other disc substitutes, which may prove dangerous to operators or cause damage to the blasting equipment. The domed deflector minimizes spray in the event of a disc rupturing and the disc holder body is simple to remove for replacing a disc.

Part #	Description	PSI
35-008-025	1/2" NPTM Rupture Disc Assy.	15K Range

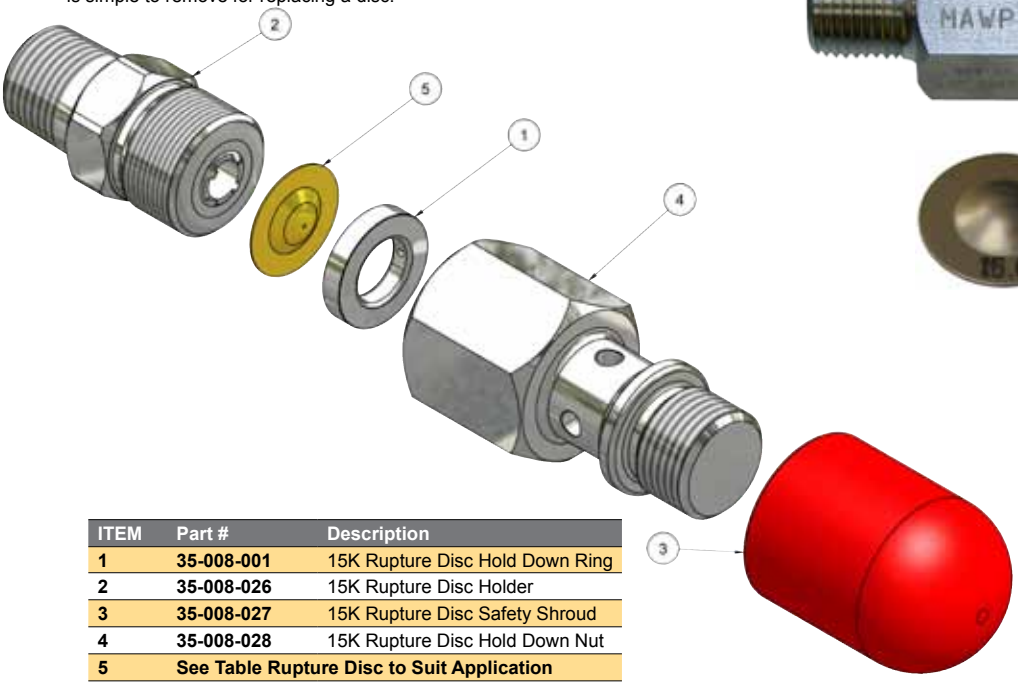

ITEM	Part #	Description
1	**35-008-001**	15K Rupture Disc Hold Down Ring
2	**35-008-026**	15K Rupture Disc Holder
3	**35-008-027**	15K Rupture Disc Safety Shroud
4	**35-008-028**	15K Rupture Disc Hold Down Nut
5	**See Table Rupture Disc to Suit Application**	

Part #	Description	PSI
35-005-030	3K Burst - Rupture Disc	1-3K
35-005-040	4K Burst - Rupture Disc	1-4K
35-005-055	5.5K Burst - Rupture Disc	1-5.5K
35-005-065	6.5K Burst - Rupture Disc	1-6.5K
35-005-070	7K Burst - Rupture Disc	1-7K
35-005-075	7.5K Burst - Rupture Disc	1-7.5K
35-005-088	8.8K Burst - Rupture Disc	1-8.8K
35-005-100	10K Burst - Rupture Disc	1-10K
35-005-105	10.5K Burst - Rupture Disc	1-10.5K
35-005-117	11.7K Burst - Rupture Disc	1-11.7K
35-005-125	12.5K Burst - Rupture Disc	1-12.5K
35-005-148	14.8K Burst - Rupture Disc	1-14.8K
35-005-175	17.5K Burst - Rupture Disc	1-17.5K
35-005-188	18.8K Burst - Rupture Disc	1-18.8K

WaterArmor Suits for Safety

At **APS** we understand the need for safety in any environment. The water blasting equipment produced at **APS** is designed with safety features. To protect the safety of the water blast technician during operation, we advise that extra safety precautions should be taken.

This is why we offer TurtleSkin WaterArmor.

Full Body Waterjet Suits — Part # 55-001-003 (Chaps & Torso Only)

Rugged and Lightweight Full Body Protection

Water jet operators appreciate the comfortable and easy-to-replace, hinged-panel design of lightweight TurtleSkin WaterArmor. The modular design allows any of the 19 individual components to be easily removed and replaced using common tools. The replacement of one or two individual parts is far less costly than the expense of purchasing a whole new suit.

TurtleSkin WaterArmor Torso — Part # 55-001-004

Upper Body Protection for Water Blasting Operators

Flexible, lightweight upper body protection that keeps the water jet operator's torso safe from potentially fatal water jet swipes.

TurtleSkin WaterArmor Chaps — Part # 55-001-005

Upper Leg Protection for Water Blasting Operators

Protective chaps for the upper legs that feature adjustable straps and thigh panels that can be lengthened or shortened to fit any size operator.

Water Blast Protective Gaiters — Part # 55-001-002

Flexible, Lightweight Water Blasting Foot Protection

Designed to protect the feet, shins, toes, and insteps, TurtleSkin WaterArmor Gaiters are constructed of hinged protective panels that flex with every step. These gaiters give water blasting operators the mobility to do their work and keep lower extremities safe from dangerous blasts.

Arm Protection Gauntlets — Part # 55-001-001 (Gloves Not Included)

Arm and Wrist Protection for Water Blasting Operators

TurtleSkin WaterArmor water jet protective gear is known for its flexibility, comfort, and toughness. The gauntlet covers the wrist, forearm, and back of the hand. Patented TurtleSkin features flexible layers constructed with the tightest weave of high-strength aramid.

ITEM	Description	
1	Vest Panel	Torso
2	Right Waist Panel	Torso
3	Belt	Chaps
4	Right Hip Panel	Chaps
5	Right Thigh Panel	Chaps
6	Right Knee	Chaps
7	Right Shin	Chaps
8	Left Waist Panel	Torso
9	Groin Guard	Torso
10	Left Hip Panel	Chaps

ITEM	Description	
11	Left Thigh Panel	Chaps
12	Left Knee	Chaps
13	Left Shin	Chaps
14	Right Gaiter Shin	Gaiters
15	Right Metatarsal	Gaiters
16	Toe	Gaiters
17	Left Gaiter Shin	Gaiters
18	Left Metatarsal	Gaiters
19	Ankle	Gaiters
20	Right Arm Gauntlets	Gauntlet
21	Left Arm Gauntlets	Gauntlet

High-Pressure Water Jet Testing Results:

The following conditions did not elicit penetration of the protective system with high-pressure water traveling at 8 feet/second (2.4 meters/second) at no closer than 3 inches (7.62 cm):

Pressure PSI (bar)	Flow Rate GPM (lpm)	Orifice ID Inches (mm)	0° Nozzle, Single Orifice: Material	Efficiency Factor *
40,000 (2,800)	5.5 (21)	0.035 (0.889)	Sapphire	22.4
36,000 (2,500)	5 (19)	0.035 (0.889)	Sapphire	21.5
20,000 (1,400)	11 (42)	0.051 (1.295)	Tungsten Carbide	29.9
10,000 (700)	16 (61)	0.073 (1.854)	Tungsten Carbide	30

* **Efficiency Factor** is equal to

Ultra High-Pressure Water Jet Safety and Performance

TurtleSkin WaterArmor uses an innovative, patented fabric to provide protection from high-pressure water jet injuries. Created by Warwick Mills, TurtleSkin is made from the tightest weave ever achieved in aramid, a fiber two times stronger and five times lighter than steel. TurtleSkin WaterArmor can protect ultra high-pressure water jet operators from pressures as high as 2800 bar (40,000 psi).

Protection up to 2800 bar or 40,000 psi

TurtleSkin WaterArmor personal protective waterjet equipment offers increased protection to ultra-high pressure water jet operators at all pressures at specified flow rates.

One Size Fits All Protection

TurtleSkin WaterArmor hydrodemolition protective suits are specifically designed for ultra-high pressure water jet safety. Every patented garment features adjustable straps, and the thigh panels on the chaps can be lengthened or shortened to fit any size operator.

APS
ADVANCED PRESSURE SYSTEMS

Lubricants, Sealants and Tapes

It is essential to keep the correct lubricants, sealants and Teflon® tapes on hand to guard against leaks and pressure loss, and to protect the threads on all water jetting components. **APS** keeps these things in stock as an added convenience for our customers. Our goal is to always be the first source you call.

Part #	Description	Size
24-001-001	Blue Goop® Thread Lubricant	2 Fl. Oz. Tube
24-001-002	Loctite® Nickel-Based Anti-Seize	1 Lb. Jar
24-001-003	Loctite® 567™ Thread Sealant	1.69 Fl. Oz.
24-001-004	1/2" White Teflon® Tape	520 Ft. Roll
24-001-005	3/4" White Teflon® Tape	520 Ft. Roll
24-001-006	1/2" Blue Monster® Premium Teflon®	1,429 Ft. Roll
24-001-007	3/4" Blue Monster® Premium Teflon® Tape	1,429 Ft. Roll
24-001-009	Jet-Lube 550	1/2 Lb. Jar
24-001-010	Jet-Lube 550	1 Lb. Jar
24-001-011	Yellow Lube®	6-6 Oz. sq tube
24-001-013	Loctite® Clover Compound, Grease Mix	16 Oz. Net WT
24-001-014	Loctite® Clover Compound, Water Mix	6-6 oz sq tube
24-001-020	Lubritech® Air Lube Airline Lubricants	16 Fl. Oz. Bottel
24-001-015	Lubemaster® Permalube 4099	14.8 Oz. Tube
24-001-020	LubriMatic® White Lithium Grease	16 Oz. Can

Blue Goop® Thread Lubricant (Excellent anti-seize lubricant, especially for 40K applications.) **Part# 24-001-001** Oil-based thread lubricant for use on stainless steel, steel, titanium, aluminum, and nickel-based alloys.

Loctite® Nickel-Based Anti-Seize Part# 24-001-002 A heavy duty, high temperature lubricant; it resists galling and corrosion, reduces wear in heavy pressure applications, contains oils and graphite which cannot be burned away or be removed by slow moving parts.

Loctite® Clover Compound, Grease Mix Part# 24-001-013 Silicon carbide particles in a grease mix. Perfect for smoothing and finishing of metal surfaces. Retains its texture and lubrication properties during extended use. Uses include cleaning corroded threads, valve rebuilding, smoothing gears, removing tool marks, lapping for flatness.

1/2" Blue Monster® Premium Teflon® Part# 24-001-006 Blue Monster is rugged, not flimsy like most thread seal tapes on the market. Blue Monster has not been stretched during the manufacturing process, so it is thicker and creates a more effective seal with less tape. Blue Monster could be used in conjunction with **# 24-001-003 Loctite® Thread Sealant** for all NPT Threads.

Jet-Lube 550 1 LB. Net WT. Part# 24-001-010 1/2 LB. Net WT. Part# 24-001-009 550 contains carefully balanced proportions of molybdenum disulphide (MoS2), graphite, and low friction fillers in an aluminum complex base grease that is fortified with effective rust and corrosion inhibitors. 550 assures protection against rust, oxidation and corrosion. It will not harden, evaporate, or settle out; and it requires no thinning. 550 is the ideal product for petrochemical plants' maintenance needs.
Applications: Threads, Flange Faces, Keyways, Gaskets. Slides, Guides and Fittings

LubriMatic® White Lithium Grease Part# 24-001-016 Includes zinc additive for a clean, white color. Ideal for general home, shop, automotive, agricultural and industrial applications. NLGI #2, drop point 393 Deg. F.

Loctite® 567™ Thread Sealant (Designed for the locking and sealing of tapered metal threads & fittings NPT.) **Part# 24-001-003** Designed for the locking and sealing of metal tapered threads and fittings. The product cures when confined in the absence of air between close fitting metal surfaces and prevents loosening and leakage from shock and vibration. The high lubricating properties of this compound prevent galling on stainless steel, aluminum and all other metal pipe threads and fittings.

Yellow Lube
3 oz. Tube -Part# 24-001-023
6 oz. sq tube -Part# 24-001-011 Very good general purpose anti-seize lubricant which also helps to seal tapered threads. Yellow Lube is a thread compound employing a heavy duty sulfur/phosphorus extreme pressure additive package for a variety of types and combinations of metals. Galling of threads is virtually impossible.

Loctite® Clover Compound, Water Mix Part# 24-001-014 Paste formulation for fast metal removal. Biodegradable, recommended for applications where cleanup with water is required.

White 1/2 Teflon® Tape 520 Ft. Roll Part# 24-001-004
White 3/4 Teflon® Tape 520 Ft. Roll Part# 24-001-005
The use of Teflon Tape on MPT fittings will help to prevent leaks.

Lubritech® Air Lube Airline Lubricants Part# 24-001-020 Air Lube Airline Lubricants are formulated specifically to absorb the moisture present in compressed air used in pneumatic tools, air motors and cylinders. They contain a unique emulsifier system designed to encapsulate up to 10% of its weight in water, while corrosion inhibitors form a protective film on metal surfaces, preventing oxidation and rust formation. Made from highly thermally stable base stocks, these hard-working lubricants help eliminate varnish formation and associated valve sticking. Air Lube Airline Lubricants will not leave hard carbon deposits or effect rubber or plastic valves and seals.

Lubemaster® Permalube 4099 (Tube)
Part# 24-001-015 This grease is for the Cobra Gun.

YOU ARE RESPONSIBLE FOR SAFETY!

Advanced Pressure Systems publishes guides for the safe use of Water Blasting Equipment.

Please READ them!

We also strongly advise that all
personnel are fully conversant with:
"Recommended Practices for the Use of
Manually Operated High Pressure Water Jetting Equipment"
published by the Water Jet Technology Association.

WJTA
WaterJet Technology Association

These may be obtained free of charge by contacting:
ADVANCED PRESSURE SYSTEMS, L.P. (877) 290-4277

Conditions of Sale & Warranty

General - These terms and conditions and warranty provisions are applicable to all products contained in this catalog, and may not be varied, except in writing by a partner of APS Pressure Systems L.P.

Terms of Sale –

1) All sales are FOB manufacturers plant, Houston, Texas, and are priced and must be paid for in US dollars.
2) The purchaser agrees to hold APS Pressure Systems (DBA: Advanced Pressure Systems) harmless for any and all claims arising from the misuse or misapplication of any product manufactured or supplied by Advanced Pressure Systems.
3) Products returned for credit will be subject to 15% restocking charge. Only standard products will be accepted for restocking. All sales of non-standard items are final.
4) Payment may be made by credit cards issued by VISA or MASTERCARD. Payment by credit cards issued by AMERICAN EXPRESS will be subject to 3% service charge.

Warranty - The following classes of products carry the warranty indicated. Any component included in an assembled product which is subject to wear is not warranted. Products which have been subject to abuse including misapplication, corrosion, excessive pressure, over-tightening and galling of screw threads will not be accepted for replacement under warranty. Products not manufactured by Advanced Pressure Systems will carry the warranty by of the respective manufacturer

Hose - Not warranted. Coupling may be warranted by manufacturer.

Rigid Lances - Ninety days from date of shipment.

Plungers and Pump Packing - Not warranted.

Control Guns, Flow Divider Valves, Flow Control Valves - Ninety days from date of shipment.

Relief Valves - 180 days from date of shipment.

Nozzles and nozzle inserts / orifices - Not warranted

Fittings, Connectors and Couplings - 180 days from date of shipment.

Shipping Costs - Orders may be shipped prepaid by any regularly available means, and the cost will be paid by the customer. Other shipping costs including but not limited to: insurance for the full retail value of the products, packaging, crating and any other handling costs will be billed to the customer. If the customer collects the products from the Houston plant there will not be any shipping charges.

Payment - All invoices are due net 30 days from date of shipment. Any invoices which are more than 30 days past due will result in the account of the customer concerned to be placed on hold.

PRODUCT INDEX

10-001-100 ..... Page 21
10-001-100 ..... Page 22
10-001-100 ..... Page 23
10-001-100 ..... Page 24
10-001-112..... Page 20
10-001-125 ..... Page 16
10-001-150 ..... Page 16
10-001-200 ..... Page 20
10-002-050 ..... Page 16
10-002-050 ..... Page 19
10-002-150 ..... Page 24
10-002-150 ..... Page 25
10-010-001 ..... Page 22
10-010-003 ..... Page 16
10-010-061 ..... Page 22
10-015-150 ..... Page 16
10-015-250 ..... Page 16
10-016-075 ..... Page 24
10-016-075 ..... Page 25
10-016-075 .... Page 26
10-020-001 ..... Page 16
10-020-002 ..... Page 16
10-022-031 ..... Page 16
10-024-150 ..... Page 16
10-060-275 ..... Page 16
10-100-003 ..... Page 16
10-100-006 ..... Page 16
10-121-325 ..... Page 16
10-201-063 ..... Page 18
10-201-175 ..... Page 20
15-001-001 ..... Page 1
15-001-011..... Page 1
15-001-016 ..... Page 1
15-001-021 ..... Page 1
15-001-031 ..... Page 1
15-001-041 ..... Page 1
15-001-051 ..... Page 1
15-001-061 ..... Page 1
15-002-001 ..... Page 1
15-002-011..... Page 1
15-002-021 ..... Page 1
15-002-031 ..... Page 1
15-002-041 ..... Page 1
15-003-001 ..... Page 1
15-003-011..... Page 1
15-003-021 ..... Page 1
15-003-031 ..... Page 1
15-003-041 ..... Page 1
15-004-001 ..... Page 1
15-004-011..... Page 1
15-004-021 ..... Page 1
15-004-031 ..... Page 1
15-004-041 ..... Page 1
15-004-051 ..... Page 1
15-005-001 ..... Page 1
15-005-011..... Page 1
15-005-021 ..... Page 1
15-005-031 ..... Page 1
15-005-041 ..... Page 1
15-006-001 ..... Page 1
15-006-011..... Page 1
15-006-021 ..... Page 1
15-006-031 ..... Page 1
15-006-041 ..... Page 1
15-007-001 ..... Page 1
15-007-011..... Page 1
15-007-021 ..... Page 1
15-007-031 ..... Page 1
15-007-041 ..... Page 1
15-007-051 ..... Page 1
15-008-000 ..... Page 1
15-008-001 ..... Page 1
15-008-002 ..... Page 1
15-008-003 ..... Page 1
15-008-005 ..... Page 1
15-008-006 ..... Page 1
15-010-026 ..... Page 5
15-010-026 ..... Page 5
15-010-028 ..... Page 5
15-010-028 ..... Page 5
15-010-031 ..... Page 5
15-010-031 ..... Page 5
15-010-036 ..... Page 5
15-010-036 ..... Page 5
15-010-043 ..... Page 5
15-010-043 ..... Page 5
15-010-047 ..... Page 5
15-010-047 ..... Page 5
15-010-050 ..... Page 5
15-010-050 ..... Page 5
15-010-052 ..... Page 5
15-010-052 ..... Page 5
15-010-055 ..... Page 5
15-010-055 ..... Page 5
15-010-059 ..... Page 5
15-010-059 ..... Page 5
15-010-060 ..... Page 5
15-010-060 ..... Page 5
15-010-062 ..... Page 5
15-010-062 ..... Page 5
15-010-065 ..... Page 5
15-010-065 ..... Page 5
15-010-067 ..... Page 5
15-010-067 ..... Page 5
15-010-069 ..... Page 5
15-010-069 ..... Page 5
15-010-071 ..... Page 5
15-010-071 ..... Page 5
15-010-073 ..... Page 5
15-010-073 ..... Page 5
15-010-075 ..... Page 5
15-010-075 ..... Page 5
15-010-077 ..... Page 5
15-010-077 ..... Page 5
15-010-078 ..... Page 5
15-010-078 ..... Page 5
15-010-080 ..... Page 5
15-010-082 ..... Page 5
15-010-084 ..... Page 5
15-010-085 ..... Page 5
15-010-089 ..... Page 5
15-010-093 ..... Page 5
15-010-094 ..... Page 5
15-010-095 ..... Page 5
15-010-100 ..... Page 5
15-010-106 ..... Page 5
15-010-111..... Page 5
15-010-118..... Page 5
15-010-125 ..... Page 5
15-010-130 ..... Page 5
15-010-140 ..... Page 5
15-010-156 ..... Page 5
15-010-167 ..... Page 5
15-010-187 ..... Page 5
15-012-001 ..... Page 6
15-012-002 ..... Page 6
15-012-003 ..... Page 6
15-012-004 ..... Page 6
15-012-005 ..... Page 6
15-012-006 ..... Page 6
15-013-000 ..... Page 6
15-013-001 ..... Page 3
15-013-002 ..... Page 3
15-013-003 ..... Page 3
15-013-004 ..... Page 3
15-013-005 ..... Page 3
15-013-006 ..... Page 3
15-013-007 ..... Page 3
15-013-008 ..... Page 3
15-013-009 ..... Page 3
15-013-010 ..... Page 3
15-013-011..... Page 3
15-013-012 ..... Page 3
15-013-013 ..... Page 3
15-013-014 ..... Page 3
15-013-015 ..... Page 3
15-013-016 ..... Page 3
15-013-017 ..... Page 3
15-013-018 ..... Page 3
15-013-019 ..... Page 3
15-013-020 ..... Page 3
15-013-021 ..... Page 3
15-013-022 ..... Page 3
15-013-023 ..... Page 3
15-014-000 ..... Page 5
15-014-001 ..... Page 5
15-014-002 ..... Page 5
15-014-003 ..... Page 5
15-014-004 ..... Page 5
15-014-005 ..... Page 5
15-014-006 ..... Page 5
15-014-007 ..... Page 5
15-014-008 ..... Page 5
15-014-009 ..... Page 5
15-014-010 ..... Page 5
15-014-011..... Page 5
15-014-012 ..... Page 5
15-014-013 ..... Page 5
15-014-014 ..... Page 5
15-014-015 ..... Page 5
15-014-016 ..... Page 5
15-014-017 ..... Page 5
15-014-018 ..... Page 5
15-014-019 ..... Page 5
15-014-020 ..... Page 5
15-014-021 ..... Page 5
15-014-022 ..... Page 5
15-014-023 ..... Page 5
15-014-024 ..... Page 5
15-014-025 ..... Page 5
15-014-026 ..... Page 5
15-014-027 ..... Page 5
15-014-028 ..... Page 5
15-014-029 ..... Page 5
15-015-001 ..... Page 5
15-015-002 ..... Page 5
15-015-003 ..... Page 5
15-015-004 ..... Page 5
15-015-005 ..... Page 5
15-015-006 ..... Page 5
15-015-007 ..... Page 5
15-015-008 ..... Page 5
15-015-009 ..... Page 5
15-015-010 ..... Page 5
15-015-011..... Page 5
15-015-012 ..... Page 5
15-015-013 ..... Page 5
15-015-014 ..... Page 5
15-015-015 ..... Page 5
15-015-016 ..... Page 5
15-015-017 ..... Page 5
15-015-018 ..... Page 5
15-015-019 ..... Page 5
15-015-019 ..... Page 5
15-015-020 ..... Page 5
15-015-020 ..... Page 5
15-015-021 ..... Page 5
15-015-021 ..... Page 5
15-015-022 ..... Page 5
15-015-022 ..... Page 5
15-015-023 ..... Page 5
15-015-023 ..... Page 5
15-015-024 ..... Page 5
15-015-024 ..... Page 5
15-015-025 ..... Page 5
15-015-025 ..... Page 5
15-015-026 ..... Page 5
15-015-026 ..... Page 5
15-015-027 ..... Page 5
15-015-027 ..... Page 5
15-015-028 ..... Page 5
15-015-028 ..... Page 5
15-015-029 ..... Page 5
15-015-029 ..... Page 5
15-016-001 ..... Page 5
15-016-001 ..... Page 5
15-016-002 ..... Page 5
15-016-002 ..... Page 5
15-016-003 ..... Page 5
15-016-003 ..... Page 5
15-016-005 ..... Page 5
15-016-005 ..... Page 5
15-016-007 ..... Page 5
15-016-007 ..... Page 5
15-016-009 ..... Page 5
15-016-009 ..... Page 5
15-016-011..... Page 5
15-016-011..... Page 5
15-016-013 ..... Page 5
15-016-013 ..... Page 5
15-016-015 ..... Page 5
15-016-015 ..... Page 5
15-016-017 ..... Page 5
15-016-017 ..... Page 5
15-016-019 ..... Page 5
15-016-019 ..... Page 5
15-016-023 ..... Page 5
15-016-023 ..... Page 5
15-017-001 ..... Page 5
15-017-002 ..... Page 5
15-017-003 ..... Page 5
15-017-005 ..... Page 5
15-017-007 ..... Page 5
15-017-009 ..... Page 5
15-017-011..... Page 5
15-017-013 ..... Page 5
15-017-015 ..... Page 5
15-017-017 ..... Page 5
15-017-019 ..... Page 5
15-017-023 ..... Page 5
15-018-000 ..... Page 10
15-018-016 ..... Page 6
15-018-018 ..... Page 6
15-018-020 ..... Page 6
15-018-021 ..... Page 6
15-018-022 ..... Page 6
15-018-024 ..... Page 6
15-018-026 ..... Page 6
15-018-028 ..... Page 6
15-018-029 ..... Page 6
15-018-031 ..... Page 6
15-018-036 ..... Page 6
15-018-043 ..... Page 6
15-018-047 ..... Page 6
15-018-050 ..... Page 6
15-018-052 ..... Page 6
15-018-055 ..... Page 6
15-018-059 ..... Page 6
15-018-062 ..... Page 6
15-018-067 ..... Page 6
15-018-070 ..... Page 6
15-018-076 ..... Page 6
15-018-082 ..... Page 6
15-018-085 ..... Page 6
15-018-093 ..... Page 6
15-018-100 ..... Page 6
15-018-118..... Page 6
15-018-125 ..... Page 6
15-018-200 ..... Page 6
15-018-201 ..... Page 6
15-018-202 ..... Page 6
15-018-203 ..... Page 6
15-018-204 ..... Page 6
15-018-205 ..... Page 6
15-018-206 ..... Page 6
15-018-207 ..... Page 6
15-018-208 ..... Page 6
15-019-021 ..... Page 6
15-019-024 ..... Page 6
15-019-026 ..... Page 6
15-019-031 ..... Page 6
15-019-036 ..... Page 6
15-019-039 ..... Page 6
15-019-043 ..... Page 6
15-019-047 ..... Page 6
15-019-050 ..... Page 6
15-019-052 ..... Page 6
15-019-055 ..... Page 6
15-019-059 ..... Page 6
15-019-060 ..... Page 6
15-019-062 ..... Page 6
15-019-065 ..... Page 6
15-019-067 ..... Page 6
15-019-069 ..... Page 6
15-019-071 ..... Page 6
15-019-073 ..... Page 6
15-019-075 ..... Page 6
15-019-077 ..... Page 6
15-019-078 ..... Page 6
15-019-080 ..... Page 6
15-019-082 ..... Page 6
15-019-085 ..... Page 6
15-019-089 ..... Page 6
15-019-093 ..... Page 6
15-019-095 ..... Page 6
15-019-100 ..... Page 6
15-019-106 ..... Page 6
15-019-109 ..... Page 6
15-019-118..... Page 6
15-019-125 ..... Page 6
15-019-130 ..... Page 6
15-019-140 ..... Page 6
15-019-156 ..... Page 6
15-019-165 ..... Page 6
15-021-000 ..... Page 3
15-021-021 ..... Page 3
15-021-024 ..... Page 3
15-021-026 ..... Page 3
15-021-031 ..... Page 3
15-021-036 ..... Page 3
15-021-039 ..... Page 3
15-021-043 ..... Page 3
15-021-047 ..... Page 3
15-021-050 ..... Page 3
15-021-052 ..... Page 3
15-021-055 ..... Page 3
15-021-059 ..... Page 3
15-021-060 ..... Page 3
15-021-062 ..... Page 3
15-021-065 ..... Page 3
15-021-067 ..... Page 3
15-021-069 ..... Page 3
15-021-071 ..... Page 3
15-021-073 ..... Page 3
15-021-075 ..... Page 3
15-021-077 ..... Page 3
15-021-078 ..... Page 3
15-021-080 ..... Page 3
15-021-082 ..... Page 3
15-021-085 ..... Page 3
15-021-089 ..... Page 3
15-021-093 ..... Page 3
15-021-095 ..... Page 3
15-021-100 ..... Page 3
15-021-106 ..... Page 3
15-021-109 ..... Page 3
15-021-118..... Page 3
15-021-125 ..... Page 3
15-021-130 ..... Page 3
15-021-140 ..... Page 3
15-021-156 ..... Page 3
15-027-109 ..... Page 3
15-027-125 ..... Page 3
15-027-140 ..... Page 3
15-027-156 ..... Page 3
15-027-165 ..... Page 3
15-027-172 ..... Page 3
15-027-187 ..... Page 3
15-027-203 ..... Page 3
15-027-218 ..... Page 3
15-027-250 ..... Page 3
15-027-312 ..... Page 3
15-028-000 ..... Page 3
15-028-109 ..... Page 3
15-028-125 ..... Page 3
15-028-140 ..... Page 3
15-028-156 ..... Page 3
15-028-165 ..... Page 3
15-028-172 ..... Page 3
15-028-187 ..... Page 3
15-028-203 ..... Page 3
15-028-218 ..... Page 3
15-028-250 ..... Page 3
15-028-312 ..... Page 3
15-029-101 ..... Page 1
15-029-111..... Page 1
15-029-121 ..... Page 1
15-029-131 ..... Page 1
15-029-141 ..... Page 1
15-030-032 ..... Page 3
15-030-047 ..... Page 3
15-030-054 ..... Page 3
15-030-062 ..... Page 3
15-030-067 ..... Page 3
15-030-078 ..... Page 3
15-030-094 ..... Page 3
15-030-125 ..... Page 3
15-030-140 ..... Page 3
15-030-156 ..... Page 3
15-035-000 ..... Page 3
15-035-003 ..... Page 3
15-035-062 ..... Page 3
15-035-071 ..... Page 3
15-035-078 ..... Page 3
15-035-083 ..... Page 3
15-035-089 ..... Page 3
15-035-093 ..... Page 3
15-035-109 ..... Page 3
15-035-125 ..... Page 3
15-035-140 ..... Page 3
15-035-156 ..... Page 3
15-035-165 ..... Page 3
15-035-172 ..... Page 3
15-036-109 ..... Page 5
15-036-125 ..... Page 5
15-036-140 ..... Page 5
15-036-156 ..... Page 5
15-036-172 ..... Page 5
15-036-187 ..... Page 5
15-036-203 ..... Page 5
15-036-219 ..... Page 5
15-036-234 ..... Page 5
15-036-250 ..... Page 5
15-037-000 ..... Page 10
15-038-109 ..... Page 5
15-038-125 ..... Page 5
15-038-140 ..... Page 5
15-038-156 ..... Page 5
15-038-172 ..... Page 5
15-038-187 ..... Page 5
15-038-203 ..... Page 5
15-038-219 ..... Page 5
15-038-234 ..... Page 5
15-038-250 ..... Page 5
15-050-000 ..... Page 10
15-075-000 ..... Page 10
15-099-000 ..... Page 27
15-099-001 ..... Page 27
15-099-002 ..... Page 27
15-099-003 ..... Page 27
15-099-125 ..... Page 27
15-099-126 ..... Page 27
15-101-001 ..... Page 1
15-101-011..... Page 1
15-101-021 ..... Page 1
15-101-031 ..... Page 1
15-101-041 ..... Page 1
15-101-051 ..... Page 1
15-101-061 ..... Page 1
15-118-000..... Page 10
15-200-028 ..... Page 5
15-200-030 ..... Page 5
15-200-031 ..... Page 5
15-200-033 ..... Page 5
15-200-035 ..... Page 5
15-200-037 ..... Page 5
15-200-039 ..... Page 5
15-200-041 ..... Page 5
15-200-043 ..... Page 5
15-200-045 ..... Page 5
15-200-047 ..... Page 5
15-200-049 ..... Page 5
15-200-051 ..... Page 5
15-200-053 ..... Page 5
15-200-055 ..... Page 5
15-218-000 ..... Page 10
20-001-001..... Page 10
20-001-002..... Page 10
20-001-003..... Page 10
20-001-004..... Page 10
20-001-005..... Page 10
20-001-006..... Page 10
20-001-007..... Page 10
20-001-008..... Page 10
20-001-009..... Page 10
20-001-011 ..... Page 10
20-001-031..... Page 10
20-001-101..... Page 10
20-001-102..... Page 10
20-001-104..... Page 10
20-001-106..... Page 10
20-003-001..... Page 13
20-003-002..... Page 13
20-003-003..... Page 13
20-003-004..... Page 13
20-003-005..... Page 13
20-003-007..... Page 13
20-003-008..... Page 13
20-003-010..... Page 13
20-003-012..... Page 13
20-003-014..... Page 13
20-003-016..... Page 13
20-003-018..... Page 13
20-003-030..... Page 13
20-003-031..... Page 13
20-003-032..... Page 13
20-003-033..... Page 13
20-003-034..... Page 13
20-003-034..... Page 13
20-003-035..... Page 13
20-003-035..... Page 13
20-004-001..... Page 13
20-004-002..... Page 13
20-004-003..... Page 13
20-004-004..... Page 13
20-004-004..... Page 24
20-004-005..... Page 13
20-004-006..... Page 13
20-004-007..... Page 13
20-004-008..... Page 13
20-004-009..... Page 13
20-004-010..... Page 13
20-004-011 ..... Page 13
20-004-012 ..... Page 13
20-004-013..... Page 13
20-004-014..... Page 13

20-004-015..... Page 13
20-004-016..... Page 13
20-004-017..... Page 13
20-004-018..... Page 13
20-004-019..... Page 13
20-004-020..... Page 13
20-004-021..... Page 13
20-004-022..... Page 13
20-004-023..... Page 13
20-004-024..... Page 13
20-004-025..... Page 13
20-004-026..... Page 13
20-004-027..... Page 13
20-004-028..... Page 13
20-004-029..... Page 13
20-004-030..... Page 13
20-005-001..... Page 10
20-005-002..... Page 10
20-005-003..... Page 10
20-005-004..... Page 10
20-005-005..... Page 10
20-005-006..... Page 10
20-005-007..... Page 10
20-005-008..... Page 10
20-005-009..... Page 10
20-005-010..... Page 10
20-005-011..... Page 10
20-005-012..... Page 10
20-005-013..... Page 10
20-005-014..... Page 10
20-005-015..... Page 10
20-005-016..... Page 10
20-005-017..... Page 10
20-005-018..... Page 10
20-005-019..... Page 10
20-005-020..... Page 10
20-006-012..... Page 14
20-006-018..... Page 14
20-006-024..... Page 14
20-006-036..... Page 14
20-006-048..... Page 14
20-007-012..... Page 14
20-007-018..... Page 14
20-007-024..... Page 14
20-007-036..... Page 14
20-007-048..... Page 14
20-008-012..... Page 14
20-008-018..... Page 14
20-008-024..... Page 14
20-008-036..... Page 14
20-008-048..... Page 14
20-009-001..... Page 10
20-009-002..... Page 10
20-009-003..... Page 10
20-009-004..... Page 10
20-009-005..... Page 10
20-009-006..... Page 10
20-010-001..... Page 10
20-010-002..... Page 10
20-010-003..... Page 10
20-010-004..... Page 10
20-010-005..... Page 10
20-010-006..... Page 10
20-010-007..... Page 10
20-010-008..... Page 10
20-010-009..... Page 10
20-010-010..... Page 10
20-010-011..... Page 10
20-010-012..... Page 10
20-010-013..... Page 10
20-010-014..... Page 10
20-010-015..... Page 10
20-010-016..... Page 10
20-010-017..... Page 10
20-010-020..... Page 10
20-010-021..... Page 10
20-010-022..... Page 10
20-010-023..... Page 10
20-010-024..... Page 10
20-010-025..... Page 10
20-010-026..... Page 10
20-010-027..... Page 10
20-010-028..... Page 10
20-010-029..... Page 10
20-011-001..... Page 11
20-011-002..... Page 11
20-011-003..... Page 11
20-011-004..... Page 11
20-011-005..... Page 11
20-011-006..... Page 11
20-011-007..... Page 11
20-011-008..... Page 11
20-011-008..... Page 24
20-011-009..... Page 11
20-011-010..... Page 11
20-011-011..... Page 11
20-011-012..... Page 11
20-011-013..... Page 11
20-011-014..... Page 11
20-011-015..... Page 11
20-011-016..... Page 11
20-012-008..... Page 23
20-012-008..... Page 23
20-012-012..... Page 14
20-012-018..... Page 14
20-012-024..... Page 14
20-012-036..... Page 14
20-012-036..... Page 23
20-012-048..... Page 14
20-012-048..... Page 21
20-013-006..... Page 24
20-013-008..... Page 24
20-013-012..... Page 14
20-013-018..... Page 14
20-013-024..... Page 14
20-013-036..... Page 14
20-013-036..... Page 24
20-013-048..... Page 14
20-013-048..... Page 22
20-014-012..... Page 14
20-014-018..... Page 14
20-014-024..... Page 14
20-014-036..... Page 14
20-014-048..... Page 14
20-015-012..... Page 14
20-015-018..... Page 14
20-015-024..... Page 14
20-015-036..... Page 14
20-015-048..... Page 14
20-018-001..... Page 10
20-018-002..... Page 10
20-018-003..... Page 10
20-018-004..... Page 10
20-018-005..... Page 10
20-018-006..... Page 10
20-018-007..... Page 10
20-018-008..... Page 10
20-019-001..... Page 11
20-019-002..... Page 11
20-019-003..... Page 11
20-019-004..... Page 11
20-019-005..... Page 11
20-019-006..... Page 11
20-019-007..... Page 11
20-019-008..... Page 11
20-019-009..... Page 11
20-019-010..... Page 11
20-019-011..... Page 11
20-019-015..... Page 11
20-019-019..... Page 11
20-019-020..... Page 11
20-019-021..... Page 11
20-019-025..... Page 11
20-019-026..... Page 11
20-019-027..... Page 11
20-020-001..... Page 11
20-020-002..... Page 11
20-020-003..... Page 11
20-020-004..... Page 11
20-020-005..... Page 11
20-020-006..... Page 11
20-020-007..... Page 11
20-020-008..... Page 11
20-020-009..... Page 11
20-020-010..... Page 11
20-023-001..... Page 11
20-023-002..... Page 11
20-023-003..... Page 11
20-023-004..... Page 11
20-023-005..... Page 11
20-023-006..... Page 11
20-023-007..... Page 11
20-023-008..... Page 11
20-023-009..... Page 11
20-023-010 .... Page 11
20-026-001..... Page 10
20-026-002..... Page 10
20-026-003..... Page 10
20-026-004..... Page 10
20-026-005..... Page 10
20-026-006..... Page 10
20-026-007..... Page 10
20-026-008..... Page 10
20-026-009..... Page 10
20-026-010..... Page 10
20-026-011..... Page 10
20-026-012..... Page 11
20-026-012..... Page 11
20-026-013..... Page 11
20-026-013..... Page 11
20-026-014..... Page 12
20-026-015..... Page 12
20-026-016..... Page 12
20-026-019..... Page 12
20-026-020..... Page 12
20-026-031..... Page 12
20-026-032..... Page 12
20-026-033..... Page 12
20-026-034..... Page 12
20-026-035..... Page 12
20-026-036..... Page 12
20-026-037..... Page 12
20-026-038..... Page 12
20-026-039..... Page 12
20-026-040..... Page 12
20-026-041..... Page 11
20-026-041..... Page 11
20-026-042..... Page 12
20-026-043..... Page 12
20-026-044..... Page 12
20-026-045..... Page 12
20-026-046..... Page 11
20-026-046..... Page 11
20-026-049..... Page 12
20-026-053..... Page 12
20-026-054..... Page 12
20-026-055..... Page 12
20-026-057..... Page 11
20-026-057..... Page 11
20-026-061..... Page 11
20-026-061..... Page 11
20-026-064..... Page 11
20-026-064..... Page 11
20-026-066..... Page 12
20-026-067..... Page 12
20-026-068..... Page 12
20-026-069..... Page 11
20-026-069..... Page 11
20-026-070..... Page 11
20-026-070..... Page 11
20-026-071..... Page 11
20-026-071 .... Page 11
20-027-001..... Page 11
20-027-002..... Page 11
20-027-003..... Page 11
20-027-004..... Page 11
20-027-005..... Page 11
20-027-006..... Page 11
20-027-007..... Page 11
20-027-008..... Page 11
20-027-009..... Page 11
20-027-010..... Page 11
20-027-011..... Page 11
20-027-012..... Page 11
20-027-013..... Page 11
20-050-001..... Page 13
20-050-002..... Page 13
20-050-003..... Page 13
20-050-004..... Page 13
20-050-005..... Page 13
20-050-006..... Page 13
20-050-100..... Page 13
20-050-101..... Page 13
20-107-010..... Page 14
20-107-020..... Page 14
20-107-048..... Page 14
20-108-010..... Page 14
20-108-020..... Page 14
20-108-040..... Page 14
20-108-048..... Page 14
20-113-024..... Page 14
20-113-036..... Page 14
20-113-048..... Page 14
20-113-060..... Page 14
20-117-010..... Page 14
20-118-010..... Page 14
20-119-012..... Page 14
20-200-001..... Page 6
20-212-048..... Page 14
20-213-048..... Page 14
21-007-039..... Page 12
21-007-040..... Page 12
21-007-041..... Page 12
21-007-042..... Page 12
21-007-056..... Page 12
21-007-058..... Page 12
21-007-059..... Page 12
21-007-060..... Page 12
21-007-061..... Page 12
21-007-064..... Page 12
21-007-065..... Page 12
21-007-066..... Page 12
21-007-067..... Page 12
21-007-068..... Page 12
21-007-069..... Page 12
21-007-071..... Page 12
21-007-074..... Page 12
21-007-075..... Page 12
21-007-077..... Page 12
21-007-156..... Page 12
24-001-001..... Page 31
24-001-002..... Page 31
24-001-003..... Page 31
24-001-004..... Page 31
24-001-005..... Page 31
24-001-006..... Page 31
24-001-007..... Page 31
24-001-009..... Page 31
24-001-010..... Page 31
24-001-011..... Page 31
24-001-013..... Page 31
24-001-014..... Page 31
24-001-015..... Page 31
24-001-020..... Page 31
24-001-020..... Page 31
24-017-001..... Page 27
24-017-010..... Page 27
24-018-045..... Page 27
30-001-010..... Page 23
30-001-018..... Page 13
30-001-018..... Page 24
30-001-018..... Page 25
30-001-018 .... Page 26
30-001-029 .... Page 26
30-001-120 .... Page 26
30-001-122..... Page 13
30-001-123..... Page 24
30-001-123..... Page 25
30-001-209 .... Page 13
30-001-218..... Page 13
30-001-910..... Page 6
30-002-126..... Page 16
30-003-018..... Page 13
30-003-120..... Page 26
30-003-122..... Page 13
30-003-209..... Page 13
30-003-218..... Page 13
30-009-016..... Page 3
35-001-001..... Page 27
35-001-002..... Page 27
35-001-003..... Page 27
35-001-004..... Page 27
35-001-009..... Page 27
35-001-024..... Page 27
35-005-030..... Page 28
35-005-040..... Page 28
35-005-055..... Page 28
35-005-065..... Page 28
35-005-070..... Page 28
35-005-075..... Page 28
35-005-088..... Page 28
35-005-100..... Page 28
35-005-105..... Page 28
35-005-117..... Page 28
35-005-125..... Page 28
35-005-148..... Page 28
35-005-175..... Page 28
35-005-188..... Page 28
35-008-001 .... Page 28
35-008-025..... Page 28
35-008-026 .... Page 28
35-008-027 .... Page 28
35-008-028..... Page 28
35-009-000..... Page 17
35-009-001..... Page 17
35-009-002..... Page 17
35-009-003..... Page 17
35-009-004..... Page 17
35-009-005..... Page 17
35-009-006..... Page 17
35-009-007..... Page 17
35-009-010..... Page 17
35-009-011..... Page 17
35-009-012..... Page 17
35-009-013..... Page 17
35-009-014..... Page 17
36-015-007.1.. Page 16
36-015-007.2.. Page 16
36-015-016..... Page 16
36-015-018.1.. Page 16
36-015-019..... Page 16
36-015-023..... Page 16
36-015-025..... Page 16
36-015-026..... Page 16
36-015-027..... Page 16
36-015-028..... Page 16
36-015-031..... Page 16
36-015-032..... Page 16
36-015-033..... Page 16
36-015-034..... Page 16
36-015-035..... Page 16
36-015-044..... Page 16
36-015-046..... Page 16
36-015-068..... Page 16
36-015-069..... Page 16
36-015-070..... Page 16
36-015-071..... Page 16
36-015-072..... Page 16
36-015-073..... Page 16
36-015-074..... Page 16
36-015-075..... Page 16
36-015-076..... Page 16
36-015-077..... Page 16
36-015-080..... Page 16
36-015-081..... Page 16
36-015-082-3.. Page 16
36-015-084..... Page 16
36-015-087..... Page 16
36-015-088..... Page 16
36-015-089..... Page 16
36-015-159..... Page 16
36-015-160..... Page 16
36-015-161..... Page 16
36-015-162..... Page 16
36-015-163..... Page 16
43-010-001..... Page 17
43-010-002..... Page 17
43-010-004..... Page 17
43-010-005..... Page 17
44-021-031..... Page 28
44-021-050..... Page 28
44-021-054..... Page 28
44-021-055..... Page 28
55-001-001..... Page 29
55-001-002..... Page 29
55-001-003..... Page 29
55-001-004..... Page 29
55-001-005..... Page 29
60-010-001..... Page 21
60-010-001..... Page 22
60-010-001..... Page 23
60-010-001..... Page 24
60-010-003..... Page 21
60-010-003..... Page 22
60-010-003..... Page 23
60-010-003..... Page 24
60-010-004..... Page 21
60-010-004..... Page 22
60-010-004..... Page 23
60-010-004..... Page 24
60-010-005..... Page 23
60-010-005..... Page 24
60-010-005.1.. Page 21
60-010-005.1.. Page 22
60-010-009..... Page 21
60-010-009..... Page 22
60-010-009..... Page 23
60-010-012..... Page 21
60-010-012..... Page 22
60-010-012..... Page 23
60-010-017..... Page 21
60-010-017..... Page 22
60-010-017..... Page 23
60-010-020..... Page 18
60-010-020..... Page 18
60-010-020..... Page 20
60-010-020..... Page 20
60-010-020..... Page 21
60-010-020..... Page 22
60-010-020..... Page 23
60-010-020..... Page 24
60-010-021..... Page 18
60-010-021..... Page 20
60-010-021..... Page 21
60-010-021..... Page 22
60-010-021..... Page 23
60-010-021..... Page 24
60-010-022..... Page 23
60-010-024..... Page 21
60-010-024..... Page 23
60-010-025..... Page 21
60-010-025..... Page 23
60-010-026..... Page 22
60-010-026..... Page 24
60-010-027..... Page 22
60-010-027..... Page 24
60-010-028..... Page 22
60-010-028..... Page 24
60-010-029..... Page 21
60-010-032..... Page 24
60-010-033..... Page 24
60-010-034..... Page 24
60-010-035..... Page 24
60-010-051..... Page 22
60-010-052..... Page 21
60-010-057..... Page 21
60-010-057..... Page 22
60-010-057..... Page 23
60-010-057..... Page 24
60-010-061..... Page 21
60-010-061..... Page 23
60-010-061..... Page 24
60-050-002..... Page 23
60-050-003..... Page 23
60-050-005..... Page 23
60-050-006..... Page 23
61-001-001..... Page 20
61-001-002..... Page 20
61-001-003..... Page 20
61-001-004..... Page 20
61-001-007..... Page 20
61-010-001..... Page 18
61-010-001..... Page 20
61-010-002..... Page 18
61-010-002..... Page 20
61-010-003..... Page 18
61-010-003..... Page 20
61-010-004..... Page 18
61-010-006..... Page 20
61-010-007..... Page 18
61-010-007..... Page 19
61-010-012..... Page 18
61-020-005..... Page 19
61-050-001..... Page 19
61-050-002..... Page 19
61-050-005..... Page 19
61-050-010..... Page 19
61-050-011..... Page 19
61-050-012..... Page 19
61-050-013..... Page 19
65-010-004..... Page 26
65-110-002..... Page 26
65-110-003 .... Page 26
65-110-015..... Page 26
70-010-004..... Page 24
70-010-004..... Page 25
70-010-004 .... Page 26
70-010-013..... Page 24
70-010-013..... Page 25
70-010-013 .... Page 26
70-010-019 .... Page 26
70-022-001..... Page 24
70-022-001..... Page 25
70-022-003..... Page 24
70-022-003..... Page 25
70-022-004..... Page 24
70-022-004..... Page 25
70-022-009..... Page 24
70-022-009..... Page 25
70-022-013..... Page 24
70-022-013..... Page 25
70-022-014..... Page 24
70-022-014..... Page 25
70-022-017..... Page 24
70-022-017..... Page 25
70-110-007..... Page 24
70-110-007..... Page 25
70-110-007 .... Page 26
70-110-008..... Page 24
70-110-008..... Page 25
70-110-008 .... Page 26
70-110-009 .... Page 26